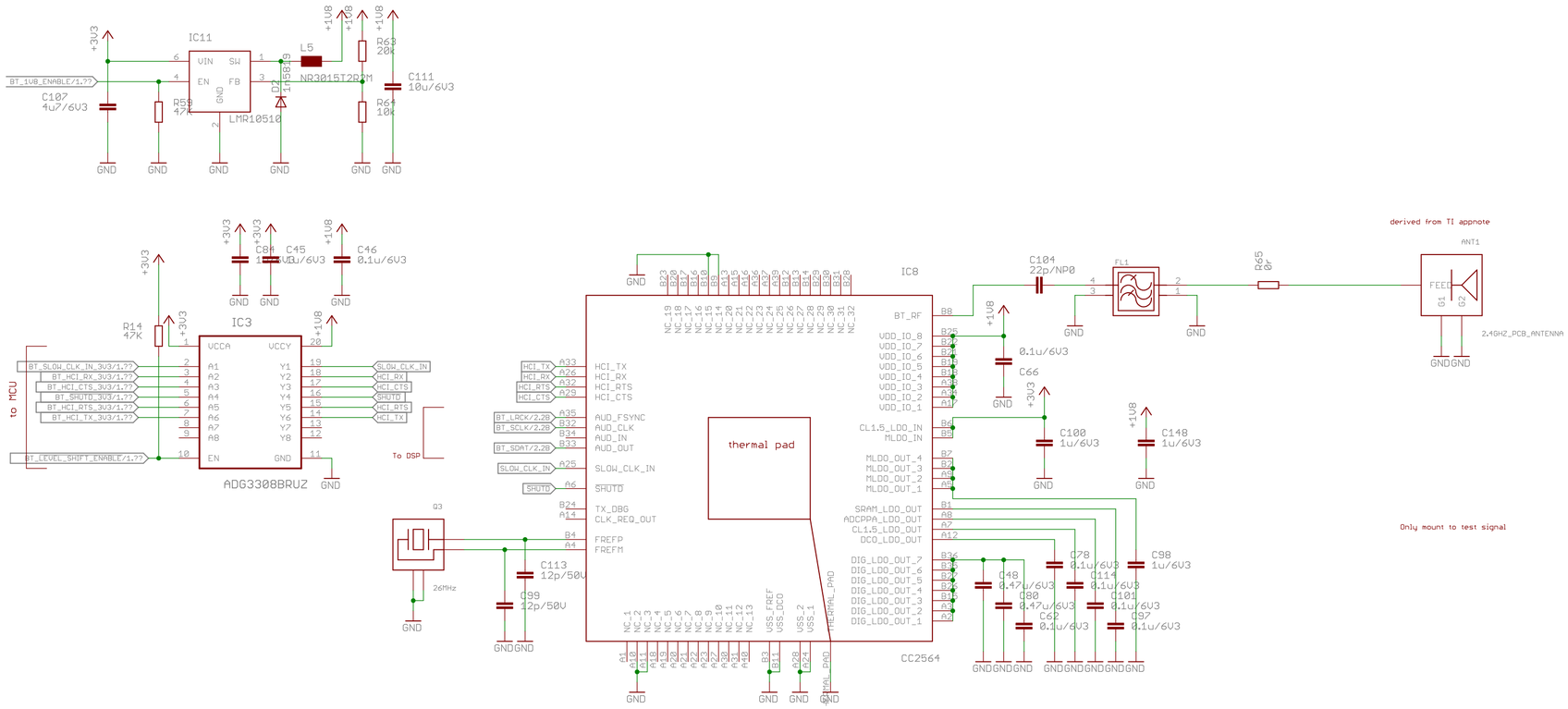
IC11
LMR10510
VIN
SW
EN
FB
GND
L5
NR3015T2R2M
D2
1N5819
R63
20k
R64
10k
C111
10u/6V3
C107
4u7/6V3
R59
47k
BT_1V8_ENABLE/1.??
+3V3
+1V8
GND
IC3
ADG3308BRUZ
VCCA
VCCY
EN
to MCU
To DSP
BT_SLOW_CLK_IN_3V3/1.??
BT_HCI_RX_3V3/1.??
BT_HCI_CTS_3V3/1.??
BT_SHUTD_3V3/1.??
BT_HCI_RTS_3V3/1.??
BT_HCI_TX_3V3/1.??
BT_LEVEL_SHIFT_ENABLE/1.??
SLOW_CLK_IN
HCI_RX
HCI_CTS
SHUTD
HCI_RTS
HCI_TX
R14
47K
C45
0.1u/6V3
C46
0.1u/6V3
IC8
CC2564
thermal pad
BT_RF
HCI_TX
HCI_RX
HCI_RTS
HCI_CTS
AUD_FSYNC
AUD_CLK
AUD_IN
AUD_OUT
SLOW_CLK_IN
SHUTD
TX_DBG
CLK_REQ_OUT
FREFP
FREFM
VDD_IO_8
VDD_IO_7
VDD_IO_6
VDD_IO_5
VDD_IO_4
VDD_IO_3
VDD_IO_2
VDD_IO_1
CL1.5_LDO_IN
MLDO_IN
MLDO_OUT_4
MLDO_OUT_3
MLDO_OUT_2
MLDO_OUT_1
SRAM_LDO_OUT
ADCPPA_LDO_OUT
CL1.5_LDO_OUT
DCO_LDO_OUT
DIG_LDO_OUT_7
DIG_LDO_OUT_6
DIG_LDO_OUT_5
DIG_LDO_OUT_4
DIG_LDO_OUT_3
DIG_LDO_OUT_2
DIG_LDO_OUT_1
THERMAL_PAD
Q3
26MHz
C113
12p/50V
C99
12p/50V
C66
0.1u/6V3
C100
1u/6V3
C148
1u/6V3
C104
22p/NP0
FL1
R65
0r
ANT1
FEED
G1
G2
2.4GHZ_PCB_ANTENNA
derived from TI appnote
C48
0.47u/6V3
C80
0.47u/6V3
C62
0.1u/6V3
C78
0.1u/6V3
C114
0.1u/6V3
C101
0.1u/6V3
C97
0.1u/6V3
C98
1u/6V3
Only mount to test signal