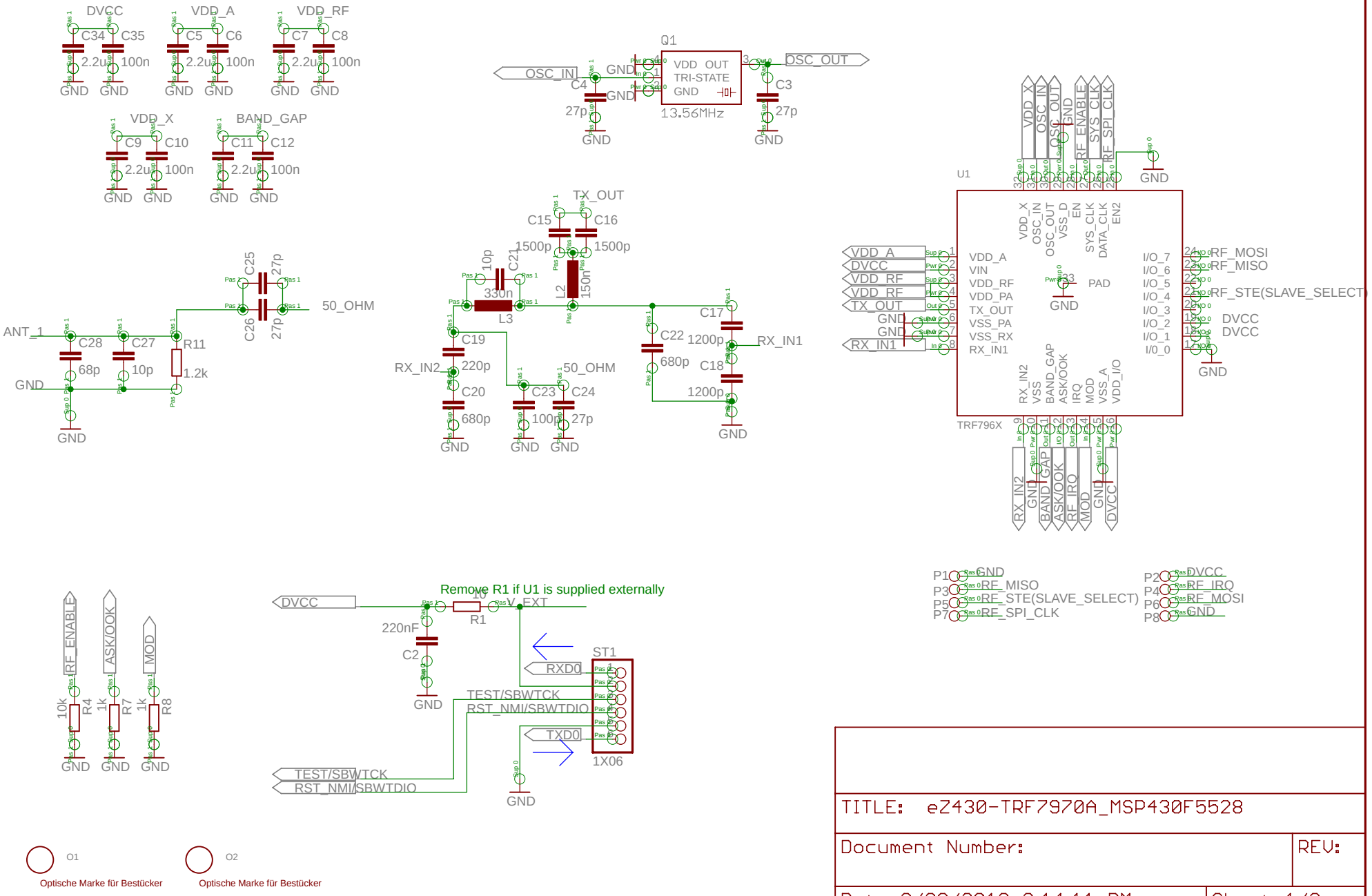

TITLE: eZ430-TRF7970A_MSP430F5528

Document Number:

REV:

Date: 3/29/2012 3:14:11 PM

Sheet: 1/2

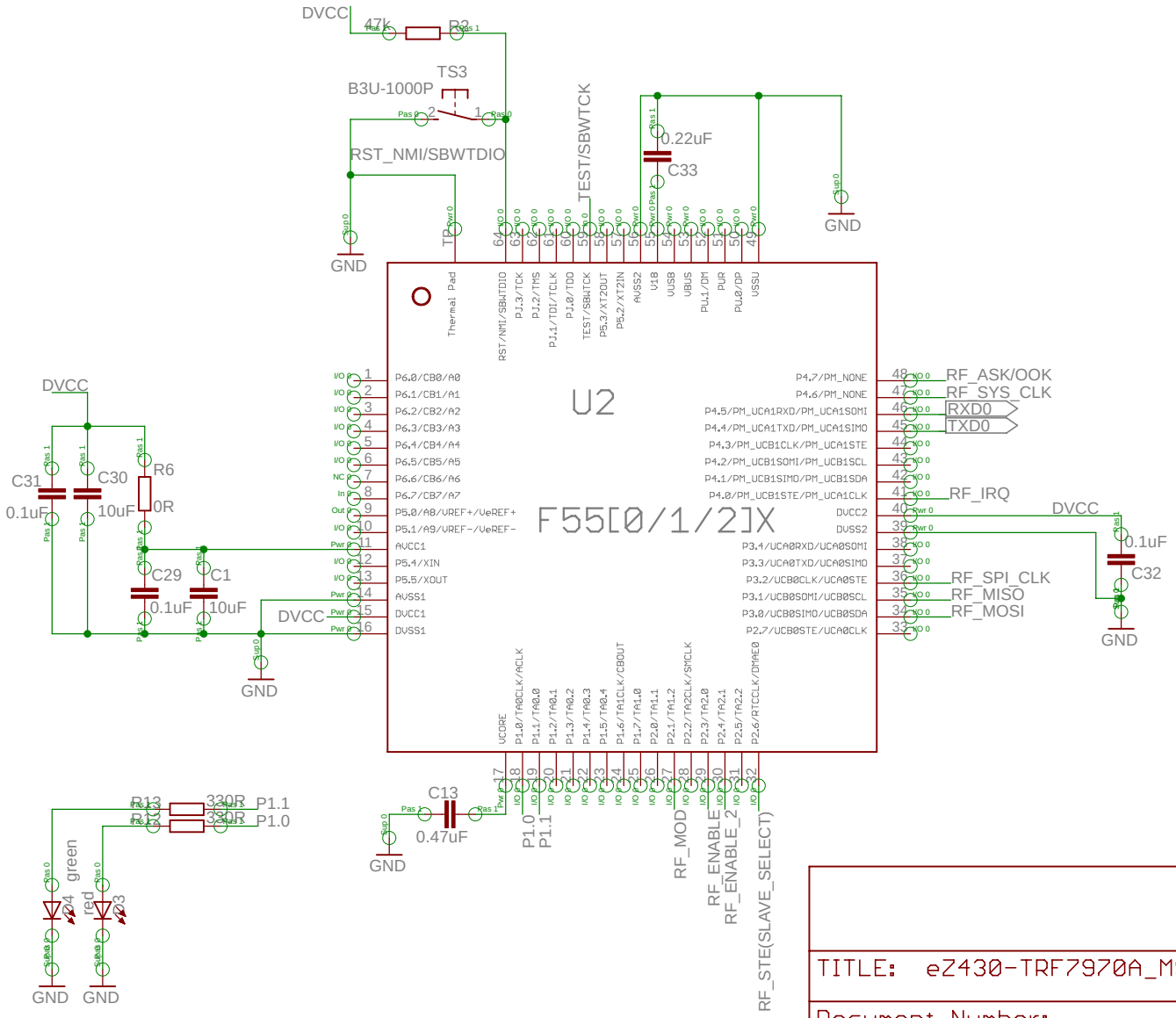

TITLE: eZ430-TRF7970A_MSP430F5528

Document Number:

REV:

Date: 3/29/2012 3:14:11 PM

Sheet: 2/2