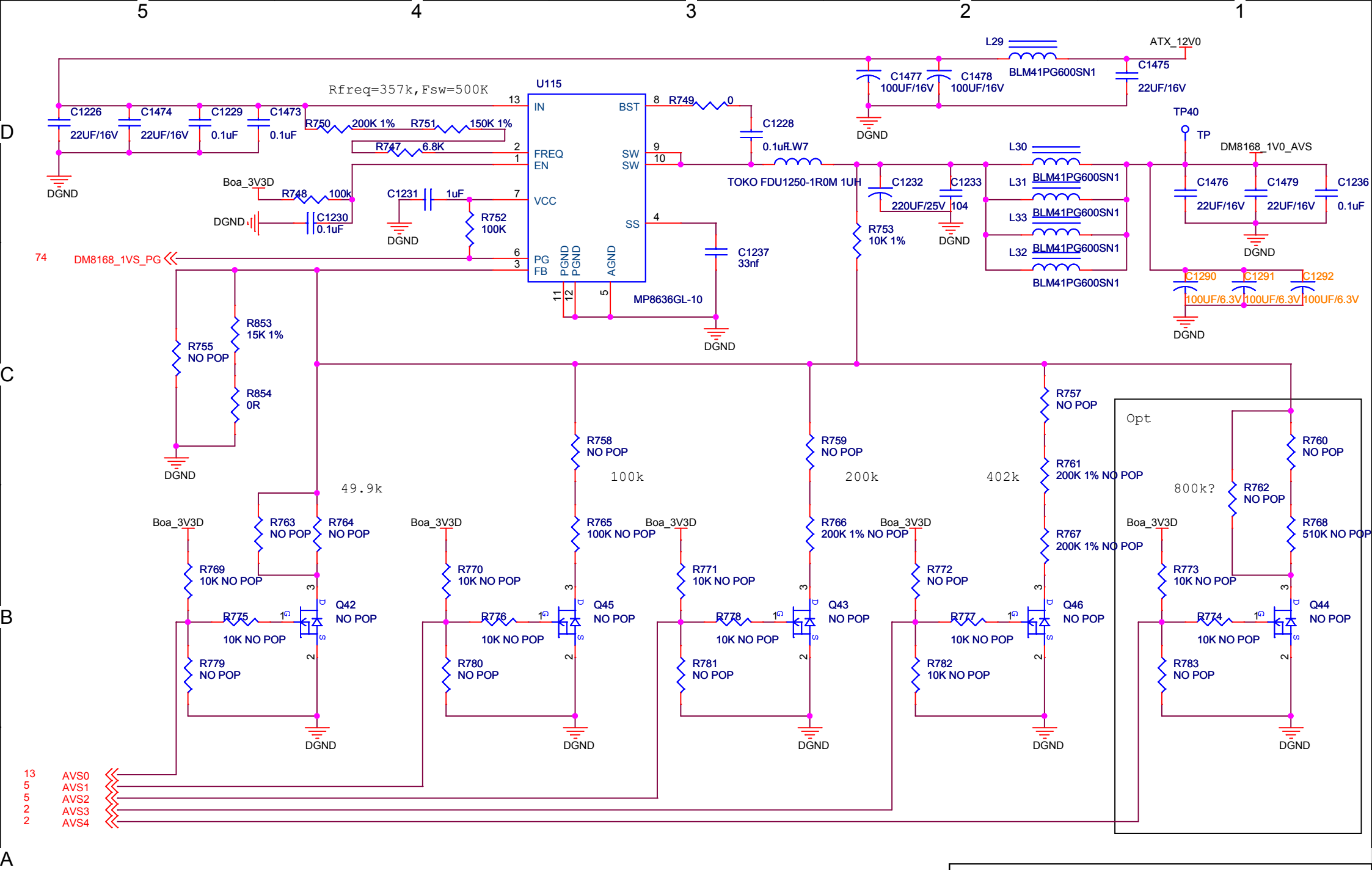


| | | |
|---|---|---|
| Title | SHEET75 - Power_DM8168_AVS | |
| Size A4 | Document Number <Doc> | Rev A |
| Date: Wednesday, August 07, 2013 | Sheet 75 of 79 | |