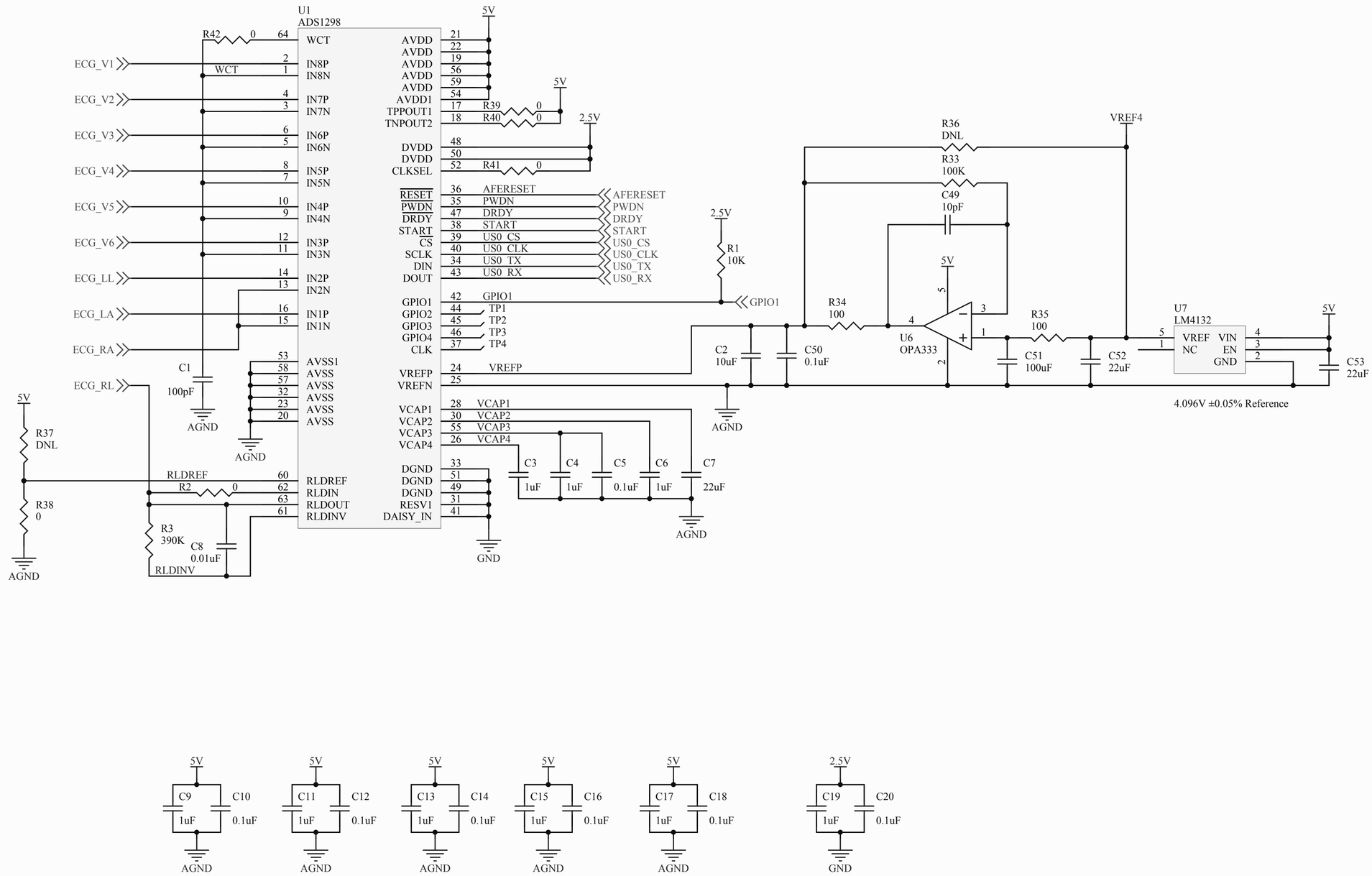

Title *Analog Front End*			
Client: Nadi	Project: Seldon	Drawn: DD	Revision: X03
Date: 5/19/2014	Time: 1:50:36 PM	Size: A3	Sheet 2 of 3
File: N:\Nadi\Cable ECG - Rev X3\AFE.SchDoc			

Novo Engineering
1350 Specialty Dr.
Suite A
Vista, CA 92081-8565

Maintain >0.5mm copper to copper clearance on the gas discharge tube side of the 10K resistors for 4KV defib voltage

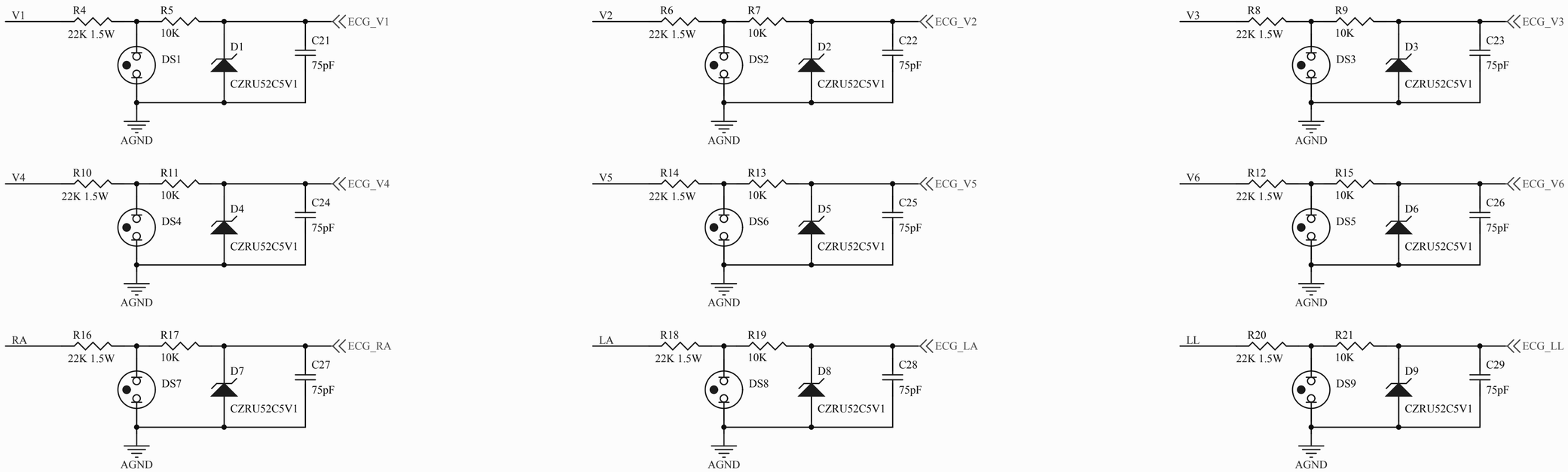

Mating connector JST PHDR-24VS

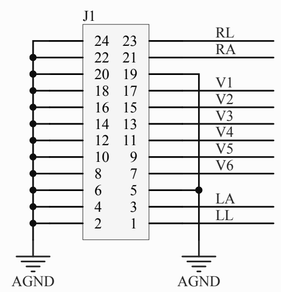

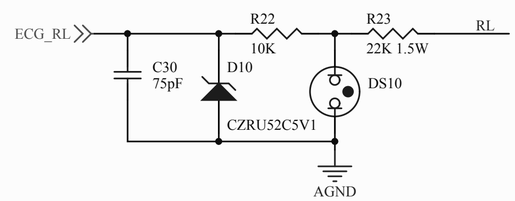

Title ***Defib Protection***			
Client: Nadi	Project: Seldon	Drawn: DD	Revision:X03
Date: 5/19/2014 Time: 1:50:36 PM Size: A3			Sheet3 of 3
File: N:\Nadi\Cable ECG - Rev X3\Protection.SchDoc			

Novo Engineering
1350 Specialty Dr.
Suite A
Vista, CA 92081-8565