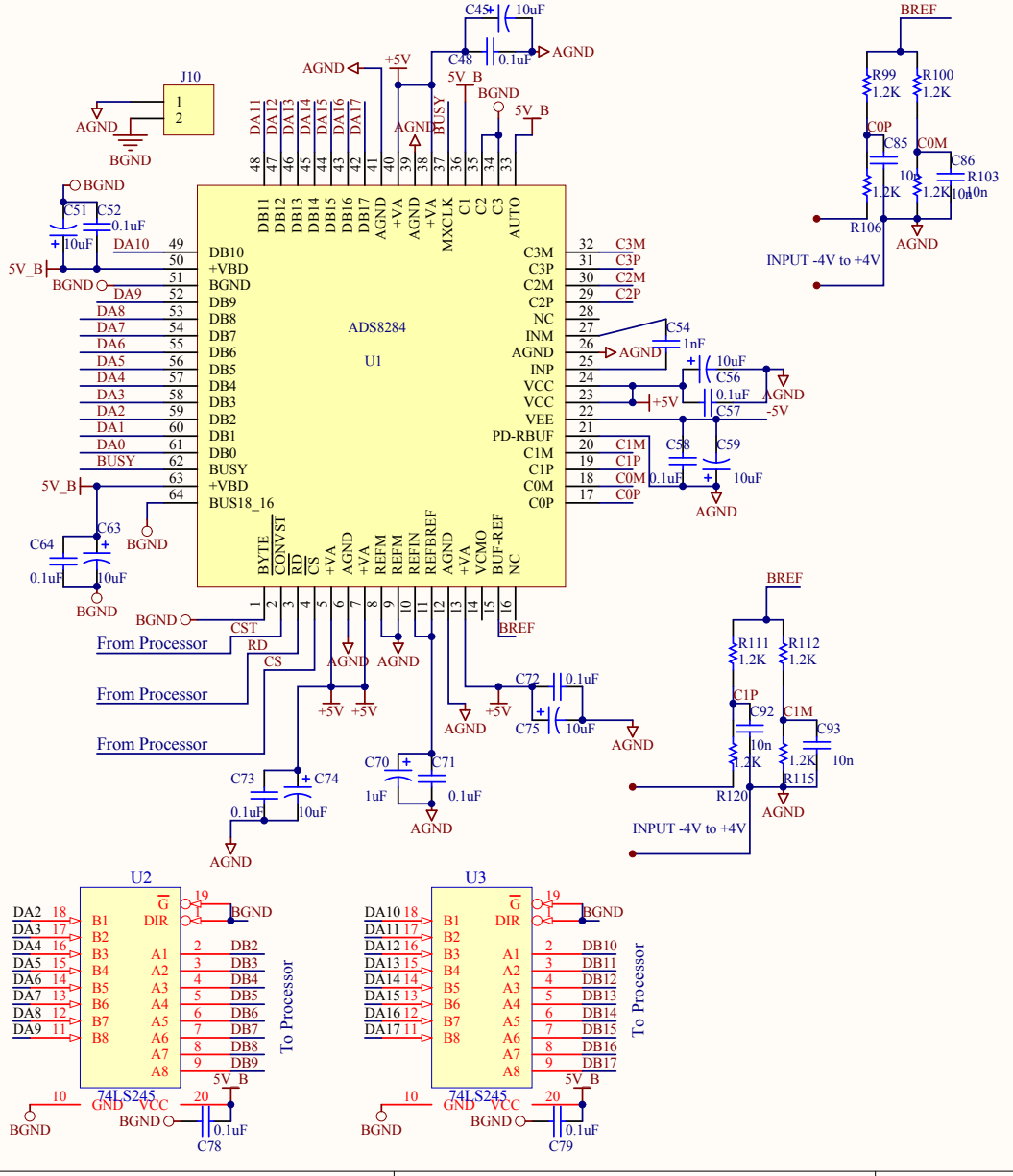

Title		
Size A4	Number	Revision
Date: 12/18/2012	Sheet of	
File: I:\complete_work\..\Sheet2.SchDoc	Drawn By:	