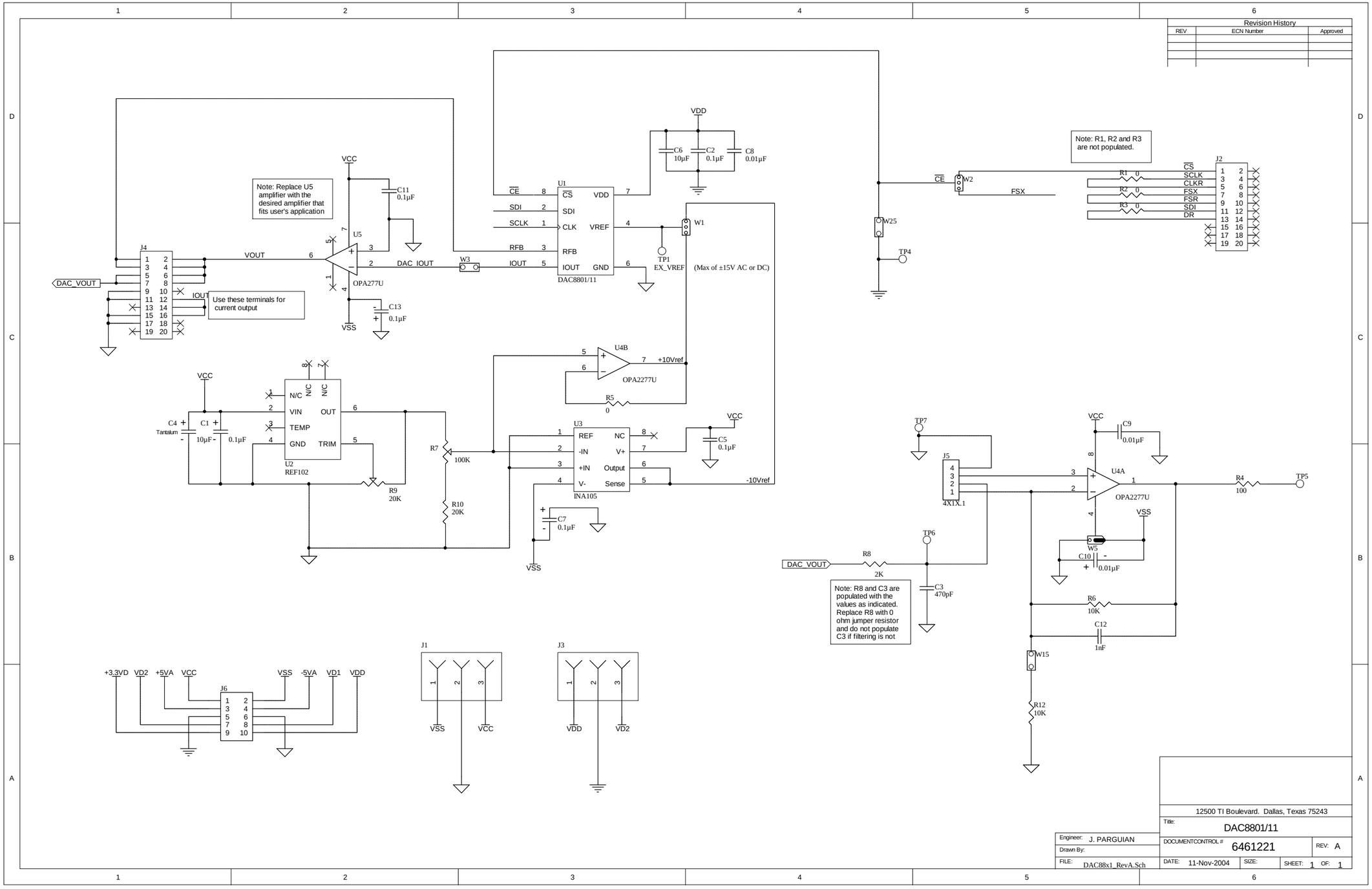
Revision History
REV
ECN Number
Approved
Note: Replace U5 amplifier with the desired amplifier that fits user's application
Use these terminals for current output
Note: R1, R2 and R3 are not populated.
Note: R8 and C3 are populated with the values as indicated. Replace R8 with 0 ohm jumper resistor and do not populate C3 if filtering is not
(Max of ±15V AC or DC)
DAC8801/11
OPA277U
INA105
REF102
4X1X.1
DAC_VOUT
EX_VREF
+10Vref
-10Vref
12500 TI Boulevard. Dallas, Texas 75243
Title:
DAC8801/11
Engineer: J. PARGUIAN
Drawn By:
FILE: DAC88x1_RevA.Sch
DOCUMENTCONTROL # 6461221
REV: A
DATE: 11-Nov-2004
SIZE:
SHEET: 1 OF: 1