26.05.2012 17:53:17 Z:\HVT2\Layout\HVT1000\HVT-049b.sch (Sheet: 1/9)

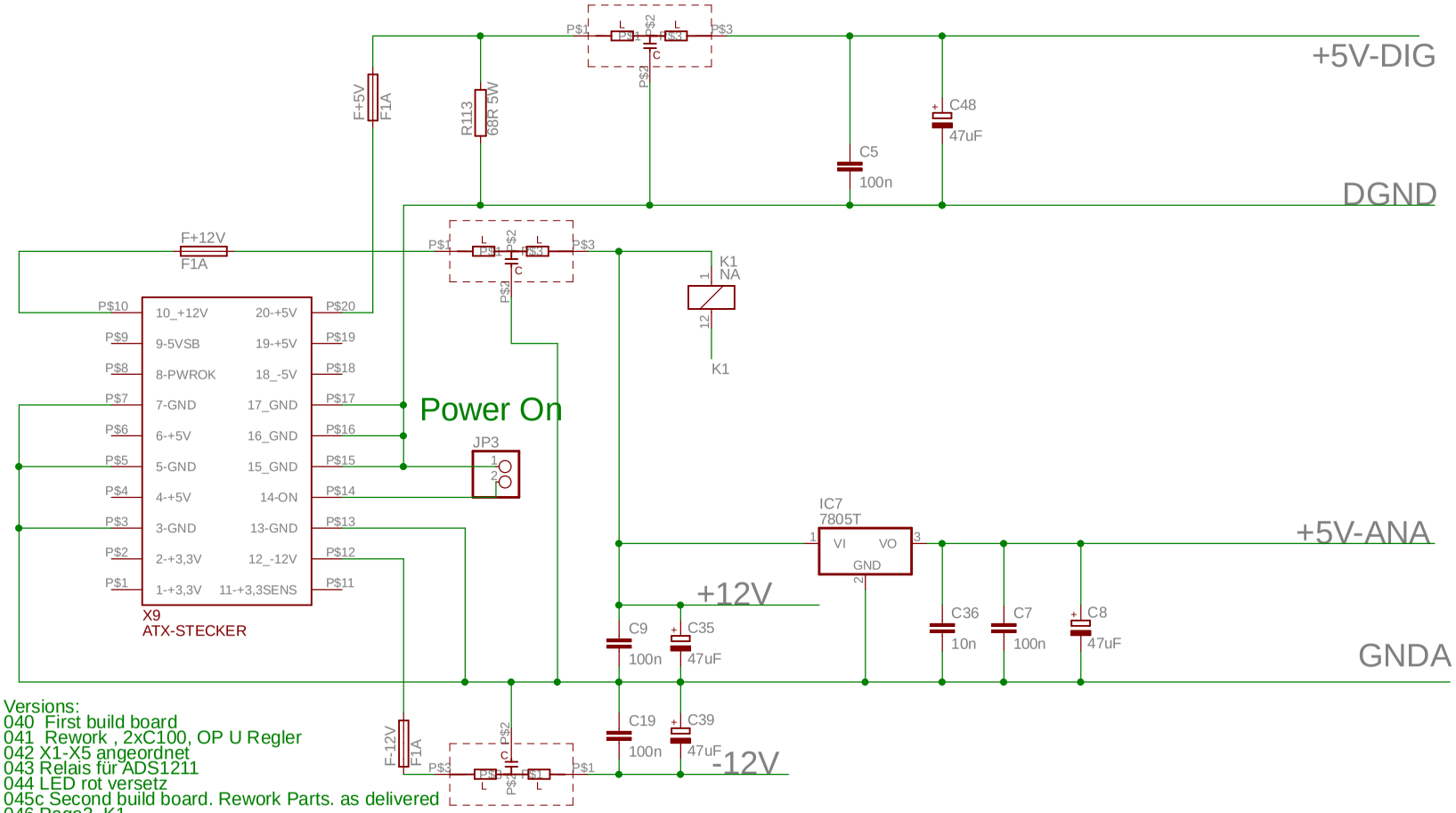

Versions:
040 First build board
041 Rework , 2xC100, OP U Regler
042 X1-X5 angeordnet
043 Relais für ADS1211
044 LED rot versetz
045c Second build board. Rework Parts. as delivered
046 Page3 K1
047 Positione part names on board, Page 5 IC9A+B Resistor add
048 Port 1-5 AC connected, ADS1256, BAV199, Opto USB, SHT71

049a-flaeche2 Second Prototype

049b an PCB neu gesendet, R Optokoppler neu

To do:

HVT Supply

TITLE: HVT-049b

Document Number:

REV:

Date: 16.05.2012 21:27:32

Sheet: 1/9