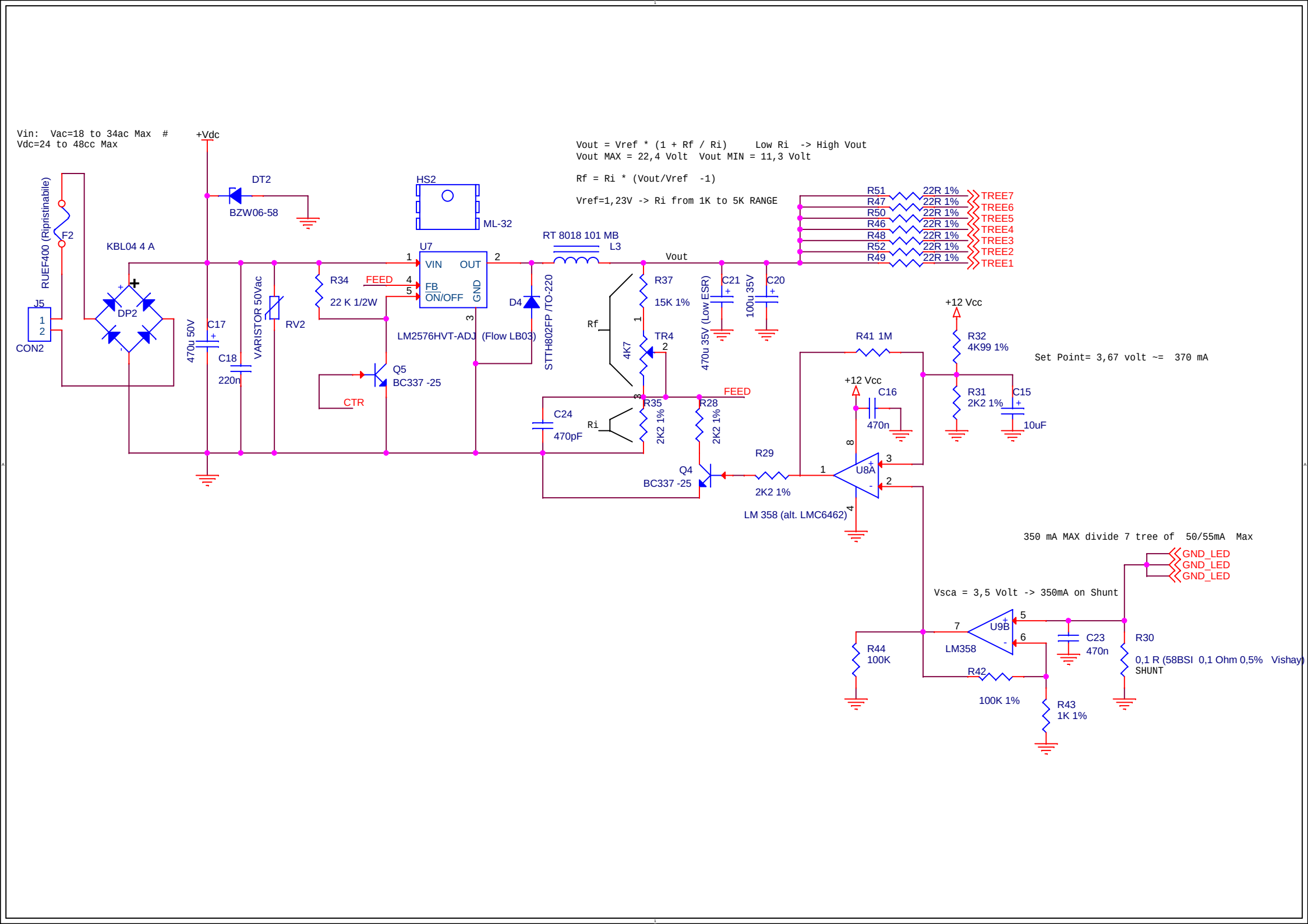
Vin: Vac=18 to 34ac Max #
Vdc=24 to 48cc Max
+Vdc
DT2
BZW06-58
HS2
ML-32
Vout = Vref * (1 + Rf / Ri) Low Ri -> High Vout
Vout MAX = 22,4 Volt Vout MIN = 11,3 Volt
Rf = Ri * (Vout/Vref -1)
Vref=1,23V -> Ri from 1K to 5K RANGE
RUEF400 (Ripristinabile)
F2
KBL04 4 A
J5
CON2
DP2
470u 50V
C17
C18
220n
VARISTOR 50Vac
RV2
R34
22 K 1/2W
FEED
U7
VIN
OUT
FB
ON/OFF
GND
LM2576HVT-ADJ (Flow LB03)
Q5
BC337 -25
CTR
D4
STTH802FP /TO-220
RT 8018 101 MB
L3
Vout
R37
15K 1%
Rf
4K7
TR4
470u 35V (Low ESR)
C21
100u 35V
C20
R51
R47
R50
R46
R48
R52
R49
22R 1%
TREE7
TREE6
TREE5
TREE4
TREE3
TREE2
TREE1
C24
470pF
Ri
R35
2K2 1%
R28
2K2 1%
FEED
Q4
BC337 -25
R29
2K2 1%
R41 1M
+12 Vcc
C16
470n
U8A
LM 358 (alt. LMC6462)
R32
4K99 1%
R31
2K2 1%
C15
10uF
Set Point= 3,67 volt ~= 370 mA
350 mA MAX divide 7 tree of 50/55mA Max
GND_LED
GND_LED
GND_LED
Vsca = 3,5 Volt -> 350mA on Shunt
U9B
LM358
C23
470n
R30
0,1 R (58BSI 0,1 Ohm 0,5% Vishay)
SHUNT
R44
100K
R42
100K 1%
R43
1K 1%