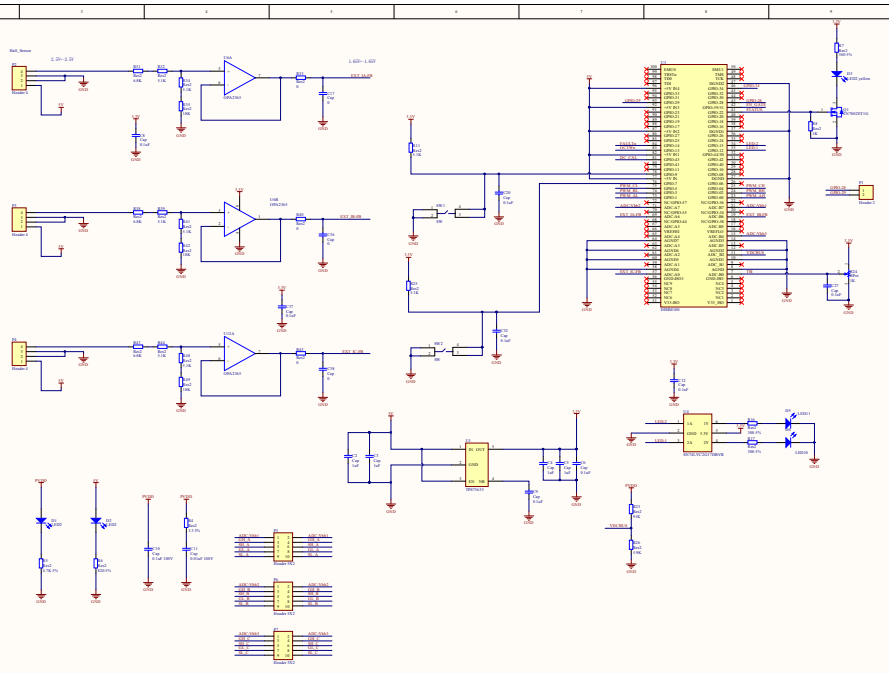

Title		
Size	Number	Revision
A1		
Date: 2022-8-8		Sheet of
File: C:\Users\Desktop\Untitled - Copy.SchDoc	Drawn By:	