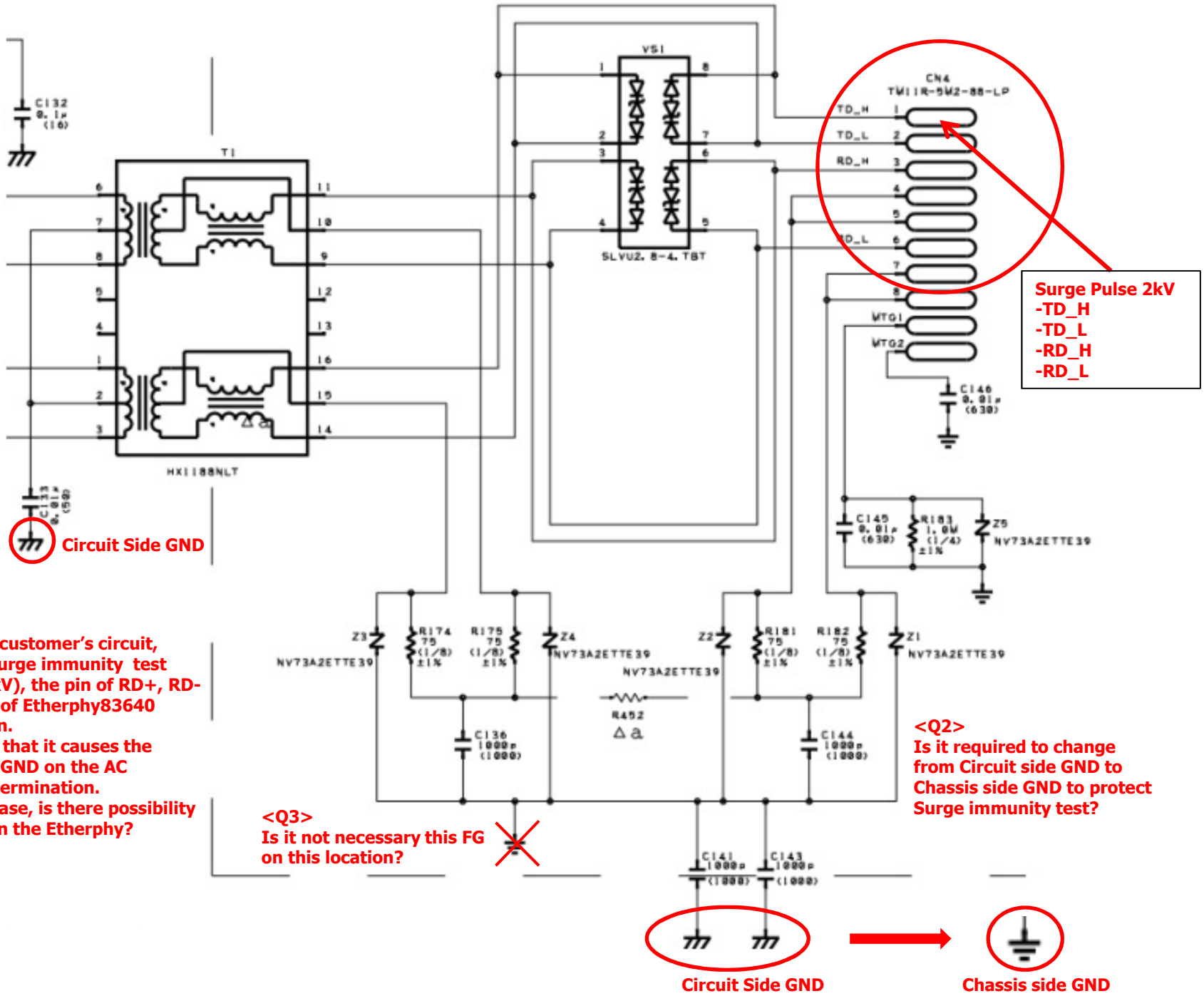

<Q1>
On this our customer's circuit, in case of Surge immunity test Level3(2.0kV), the pin of RD+, RD- TD+ or TD- of Etherphy83640 were broken.
We suspect that it causes the circuit Side GND on the AC Bob-smith termination.
So, in this case, is there possibility to be broken the Etherphy?

<Q2>
Is it required to change from Circuit side GND to Chassis side GND to protect Surge immunity test?

<Q3>
Is it not necessary this FG on this location?

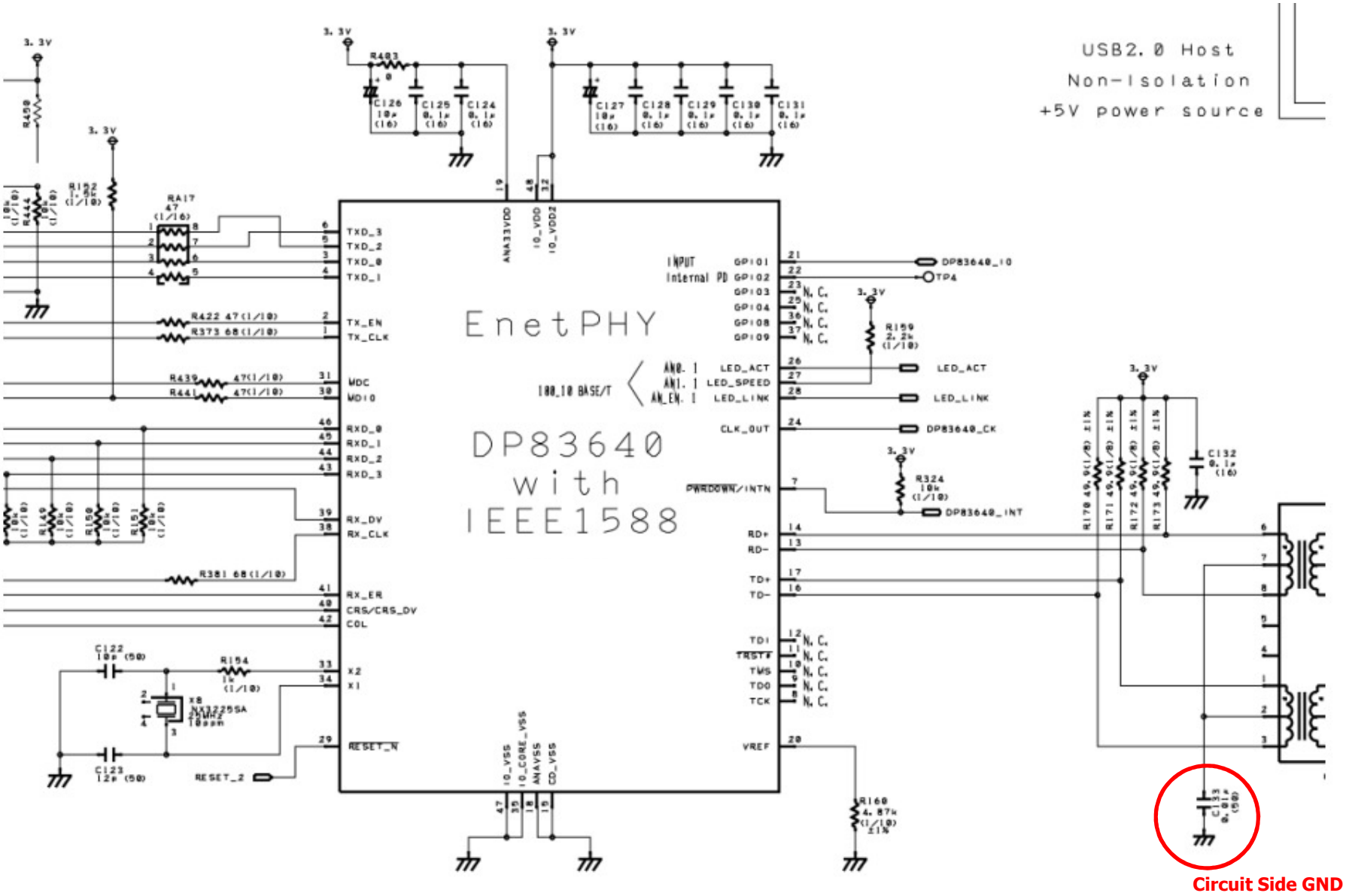
USB2.0 Host
Non-Isolation
+5V power source
EnetPHY
DP83640
with
IEEE1588
3.3V
R403
C126 10µ (16)
C125 0.1µ (16)
C124 0.1µ (16)
C127 10µ (16)
C128 0.1µ (16)
C129 0.1µ (16)
C130 0.1µ (16)
C131 0.1µ (16)
R450
R444 10k (1/10)
R152 1.8k (1/10)
RA17 47 (1/16)
ANA33VDD
IO_VDD
IO_VDD2
TXD_3
TXD_2
TXD_0
TXD_1
TX_EN
TX_CLK
R422 47(1/10)
R373 68(1/10)
MDC
MDIO
R439 47(1/10)
R441 47(1/10)
RXD_0
RXD_1
RXD_2
RXD_3
RX_DV
RX_CLK
R149 10k (1/10)
R150 10k (1/10)
R151 10k (1/10)
R381 68(1/10)
RX_ER
CRS/CRS_DV
COL
C122 10p (50)
R154 1k (1/10)
X8 NX3225SA 25MHz 10ppm
C123 12p (50)
X2
X1
RESET_N
RESET_2
IO_VSS
IO_CORE_VSS
ANAVSS
CD_VSS
INPUT
Internal PD
GPIO1
GPIO2
GPIO3
GPIO4
GPIO8
GPIO9
N.C.
DP83640_IO
TP4
R159 2.2k (1/10)
100_10 BASE/T
ANO. I
ANI. I
AN_EN. I
LED_ACT
LED_SPEED
LED_LINK
CLK_OUT
DP83640_CK
PWRDOWN/INTN
R324 10k (1/10)
DP83640_INT
RD+
RD-
TD+
TD-
TDI
TRSTN
TMS
TDO
TCK
VREF
R160 4.87k (1/10) ±1%
R170 49.9(1/8) ±1%
R171 49.9(1/8) ±1%
R172 49.9(1/8) ±1%
R173 49.9(1/8) ±1%
C132 0.1µ (16)
C133 0.01µ (50)
Circuit Side GND