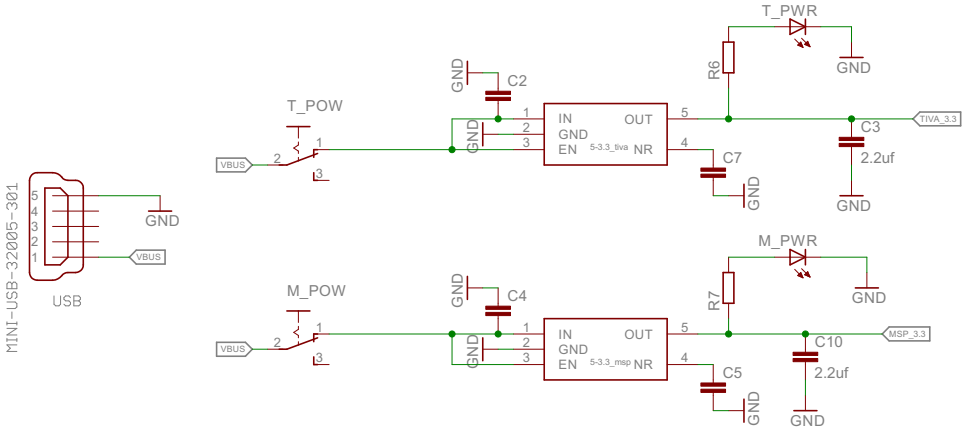
MINI-USB-32005-301
USB
GND
VBUS
T_POW
M_POW
C2
C4
IN
OUT
GND
EN
5-3.3_tiva
5-3.3_msp
NR
R6
R7
T_PWR
M_PWR
C3
C7
C10
C5
2.2uf
TIVA_3.3
MSP_3.3

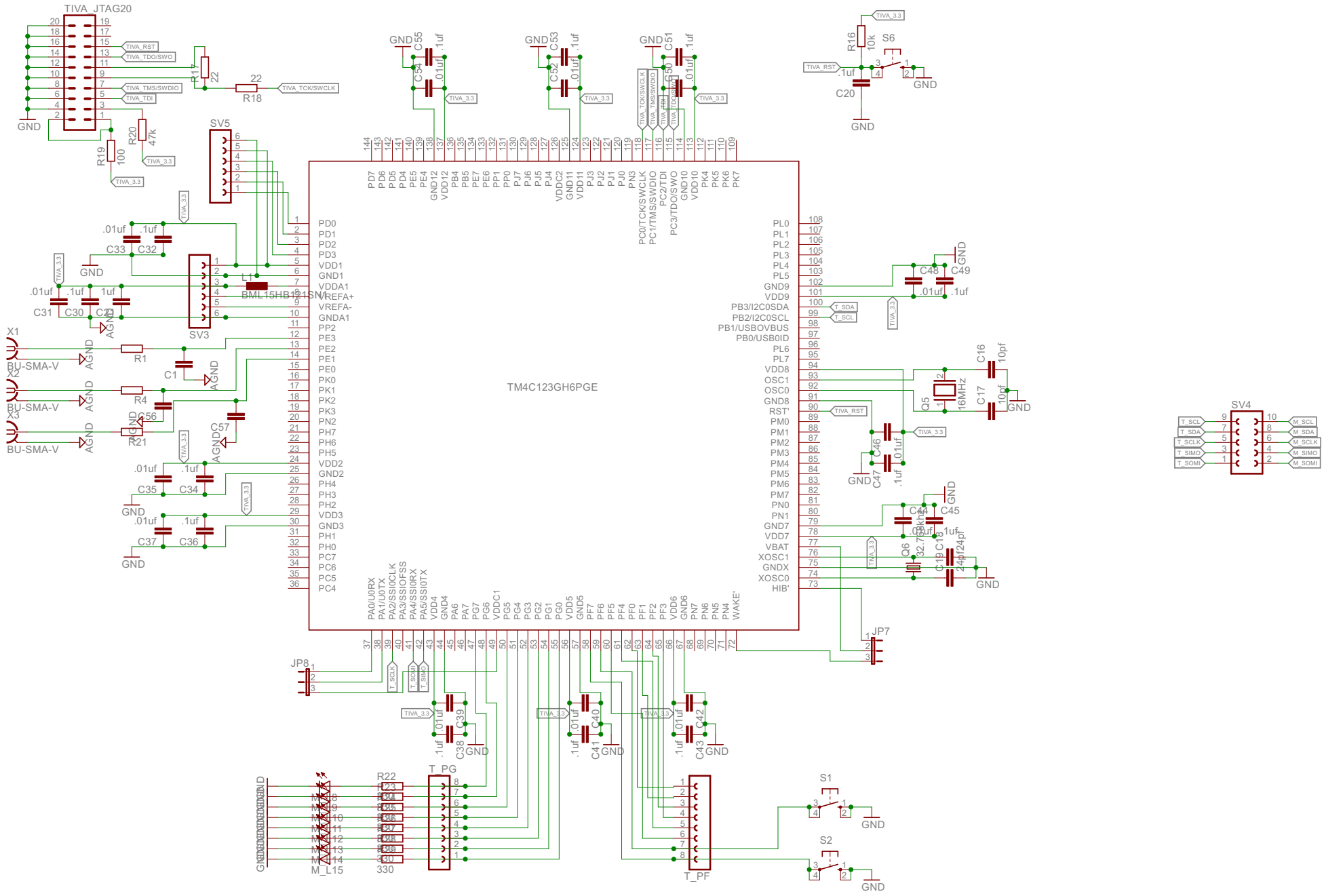
TIVA_JTAG20
TM4C123GH6PGE
SV3
SV4
SV5
T_PG
T_PF
JP7
JP8
S1
S2
S6
Q5
Q6
16MHz
32.768kHz
BML15HB121SNV
BU-SMA-V
TIVA_3.3
GND
AGND

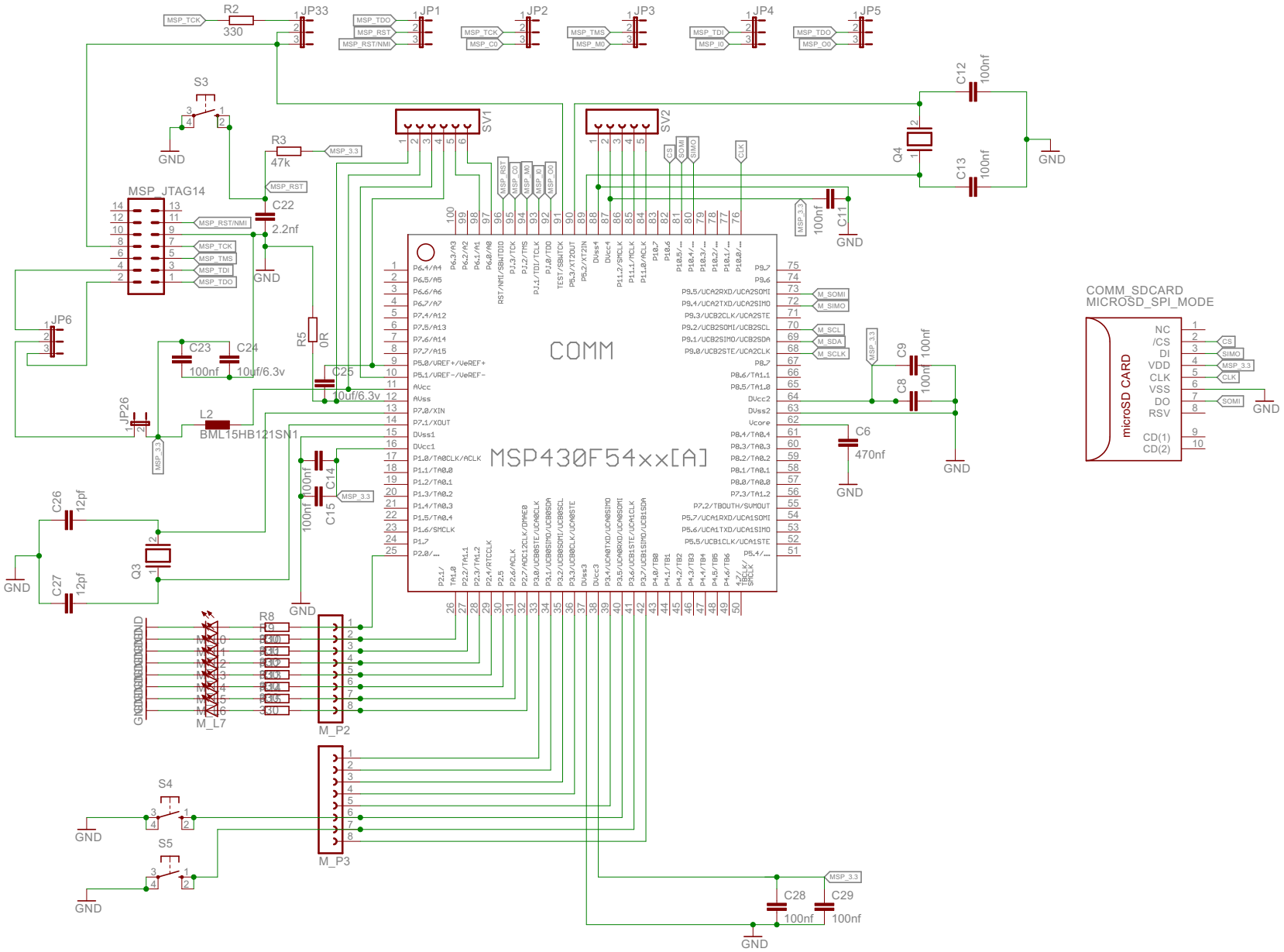
MSP430F54xx[A]
COMM
MSP_JTAG14
COMM_SDCARD
MICROSD_SPI_MODE
microSD CARD
M_P2
M_P3
M_L7
SV1
SV2
JP33
JP1
JP2
JP3
JP4
JP5
JP6
JP26
S3
S4
S5
Q3
Q4
L2
BML15HB121SN1
R2
330
R3
47k
R5
0R
C22
2.2nf
C23
100nf
C24
10uf/6.3v
C25
10uf/6.3v
C26
12pf
C27
12pf
C14
100nf
C15
100nf
C11
100nf
C12
100nf
C13
100nf
C8
100nf
C9
100nf
C6
470nf
C28
100nf
C29
100nf
GND
MSP_3.3
MSP_TCK
MSP_TDO
MSP_RST
MSP_RST/NMI
MSP_TMS
MSP_TDI
M_SOMI
M_SIMO
M_SCL
M_SDA
M_SCLK
CS
SIMO
CLK
SOMI