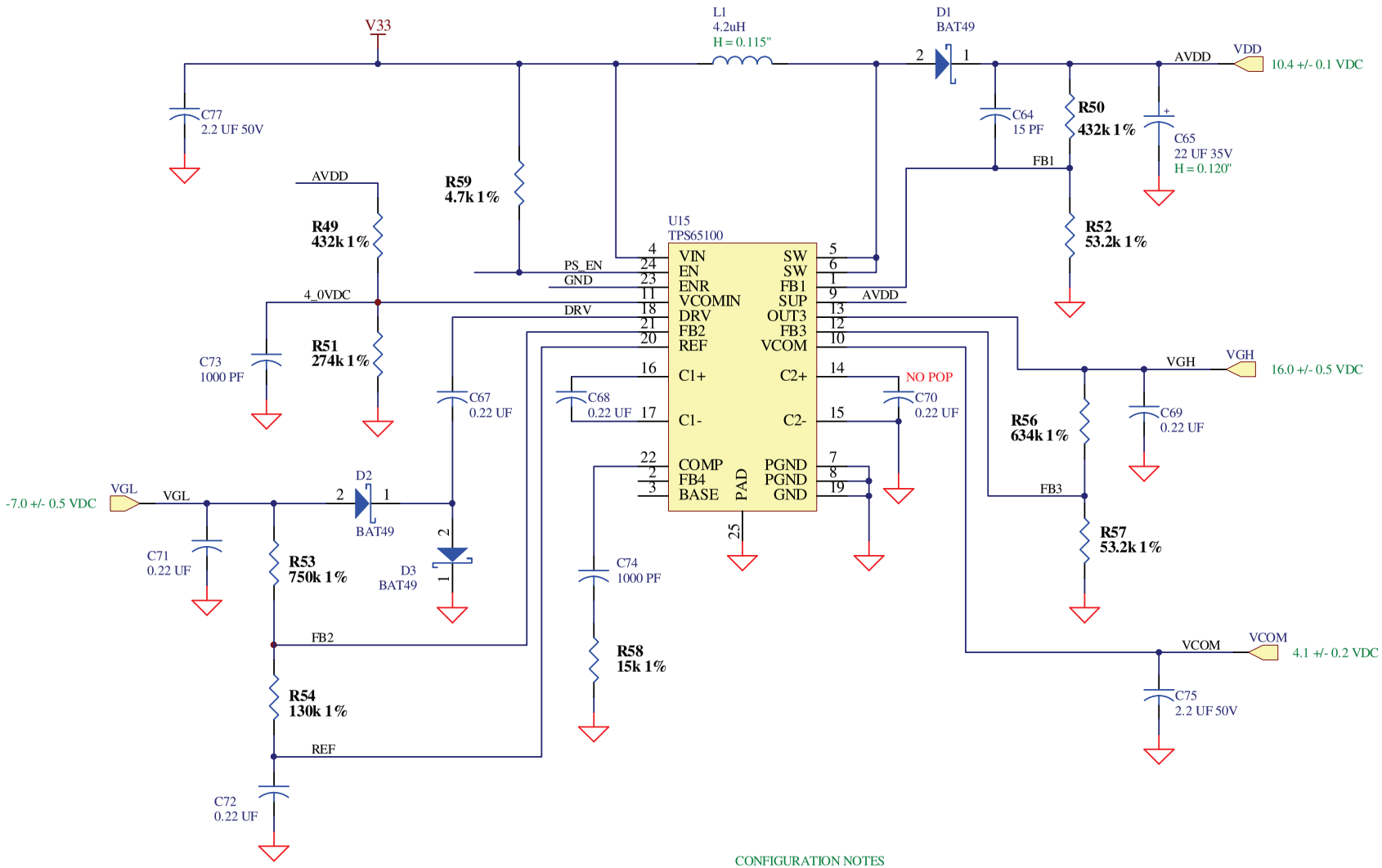
V33
L1
4.2uH
H = 0.115"
D1
BAT49
AVDD
VDD
10.4 +/- 0.1 VDC
C77
2.2 UF 50V
C64
15 PF
R50
432k 1%
C65
22 UF 35V
H = 0.120"
FB1
R52
53.2k 1%
AVDD
R59
4.7k 1%
R49
432k 1%
U15
TPS65100
PS_EN
GND
4_0VDC
DRV
VIN
EN
ENR
VCOMIN
DRV
FB2
REF
C1+
C1-
COMP
FB4
BASE
PAD
SW
SW
FB1
SUP
OUT3
FB3
VCOM
C2+
C2-
PGND
PGND
GND
AVDD
C73
1000 PF
R51
274k 1%
C67
0.22 UF
C68
0.22 UF
NO POP
C70
0.22 UF
VGH
VGH
16.0 +/- 0.5 VDC
C69
0.22 UF
R56
634k 1%
FB3
R57
53.2k 1%
VGL
-7.0 +/- 0.5 VDC
VGL
D2
BAT49
C71
0.22 UF
R53
750k 1%
D3
BAT49
C74
1000 PF
R58
15k 1%
FB2
R54
130k 1%
REF
C72
0.22 UF
VCOM
VCOM
4.1 +/- 0.2 VDC
C75
2.2 UF 50V
CONFIGURATION NOTES