Equations for Calculating Voltage Accuracy for UCD92xx Output Rails
(Assumes resistor divider between Vout and EAP/N for voltages >1.4V)

Maximum Voltage Setpoint Error as defined at the EAP/N pins by the UCD92xx Specification

$$EAPN_Error_25C := 10mV$$

$$EAPN_Error_Temp := 20mV$$

Overall Setpoint Accuracy for voltage rails equal to or less than 1.4V at Room Ambient and over Temperature (no resistor divider between Vout and EAP/N pins of UCD92xx controller)

Define Actual REFDAC Setpoint from Target Vout Value (worst case error <1/2 LSB of REFDAC)

$$Actual_REFDAC_decimal_count = RND\left(\frac{Target_Vout}{REFDAC_LSB_voltage}\right) = RND\left(\frac{Target_Vout}{1.5625mV}\right) = N$$

$$Actual_REFDAC_setpoint = Actual_REFDAC_decimal_count \cdot REFDAC_LSB_voltage = N \cdot 1.5625mV$$

Accuracy of Rails equal to or less than 1.4V at Room Ambient and over Temperature

$$\%_Vout_Accuracy_25C = \left|\frac{Actual_REFDAC_setpoint + EAPN_Error_25C - Vout_target}{Vout_target}\right| \cdot 100$$

$$\%_Vout_Accuracy_Temp = \left|\frac{Actual_REFDAC_setpoint + EAPN_Error_Temp - Vout_target}{Vout_target}\right| \cdot 100$$

Overall Setpoint Accuracy for voltage rails higher than 1.4V at Room Ambient and over Temperature (includes resistor divider between Vout and EAP/N pins of UCD92xx controller)

Method to achieve highest voltage accuracy - Specify Target REFDAC Setpoint

$$\text{Target_REFDAC_setpoint} \equiv 1.4\text{V}$$

Determine Target Gain for Scaling Output Voltage to 1.4V at the UCD92xx EAPN Input

$$\text{Target_Resistor_Divider_Gain} = \frac{\text{Target_REFDAC_setpoint}}{\text{Target_Vout}}$$

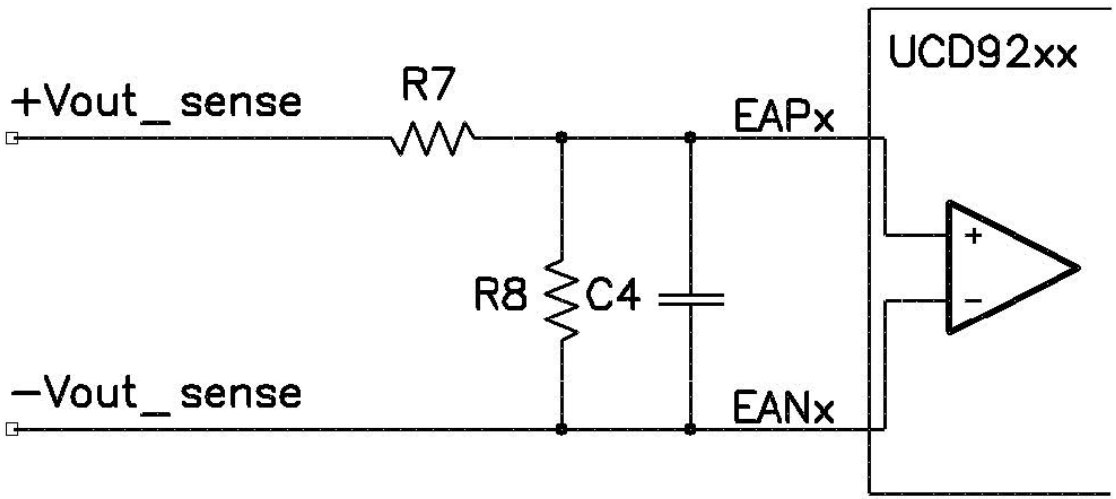

Figure 5. Error Amplifier Circuitry

Follow UCD92xx Hardware Configuration Guidlines to select resistor divider values to acheive a gain solution close to the calculated target

$$\text{Actual_Resistor_Divider_Gain} = \frac{R8}{R7 + R8}$$

Determine Calculated REFDAC Setpoint from Target Output Voltage and Voltage Scaling Resistors

$$\text{Calculated_REFDAC_setpoint} = \text{Target_Vout} \cdot \text{Actual_Resistor_Divider_Gain} = \text{Target_Vout} \cdot \frac{\text{R8}}{\text{R7} + \text{R8}}$$

$$\text{Actual_REFDAC_decimal_count} = \text{RND}\left(\frac{\text{Calculated_REFDAC_setpoint}}{\text{REFDAC_LSB_voltage}}\right) = \text{RND}\left(\frac{\text{Calculated_REFDAC_setpoint}}{1.5625\text{mV}}\right) = \text{N}$$

$$\text{Actual_REFDAC_setpoint} = \text{Actual_REFDAC_decimal_count} \cdot \text{REFDAC_LSB_voltage} = \text{N} \cdot 1.5625\text{mV}$$

Calculate Worst Case Gain from Voltage Scaling Resistor Tolerances

$$\text{Resistor_Divider_Gain_worst_case} = \frac{1}{\left[\dfrac{\text{R7} \cdot \left(1 + \dfrac{\text{R7_tolerance}}{100}\right)}{\text{R8} \cdot \left(1 - \dfrac{\text{R8_tolerance}}{100}\right)}\right] + 1}$$

Accuracy of Rails greater than 1.4V at Room Ambient and over Temperature

$$\text{\%_Vout_Accuracy_25C} = \left| \frac{\dfrac{\text{Actual_REFDAC_setpoint} + \text{EAPN_Error_25C}}{\text{Resistor_Divider_Gain_worst_case}} - \text{Target_Vout}}{\text{Target_Vout}} \right| \cdot 100$$

$$\text{\%_Vout_Accuracy_Temp} = \left| \frac{\dfrac{\text{Actual_REFDAC_setpoint} + \text{EAPN_Error_Temp}}{\text{Resistor_Divider_Gain_worst_case}} - \text{Target_Vout}}{\text{Target_Vout}} \right| \cdot 100$$