Texas Instruments

Using a Voltage DAC or PWM Signal to Control the ONET4211LD

4/8/08

Alex Davidson

214-567-2529

adavidson@ti.com

Control of ONET4211LD

- The MODSET, IBMAX and APSET pins control the bias and modulation currents.
- Approximately 400µA current pulled out of each pin equates to maximum bias current or modulation current.
- Three methods to control the currents are shown below

Method #1

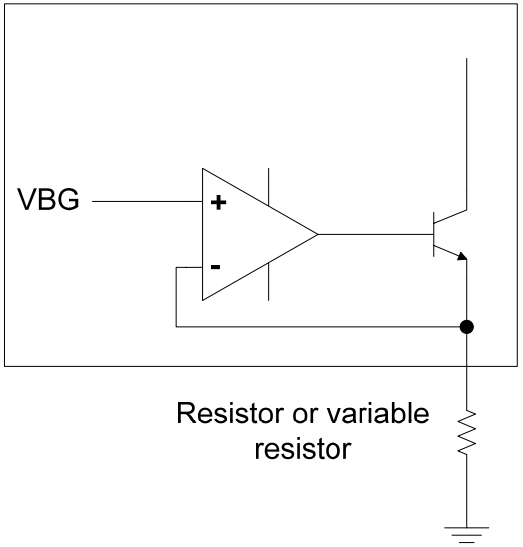

Method #2

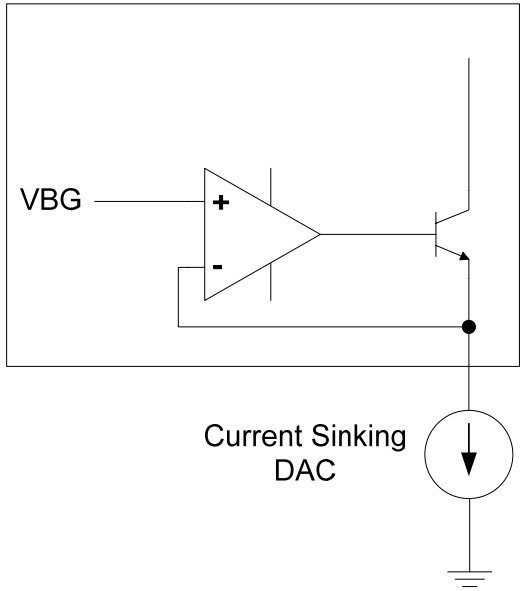

Method #3

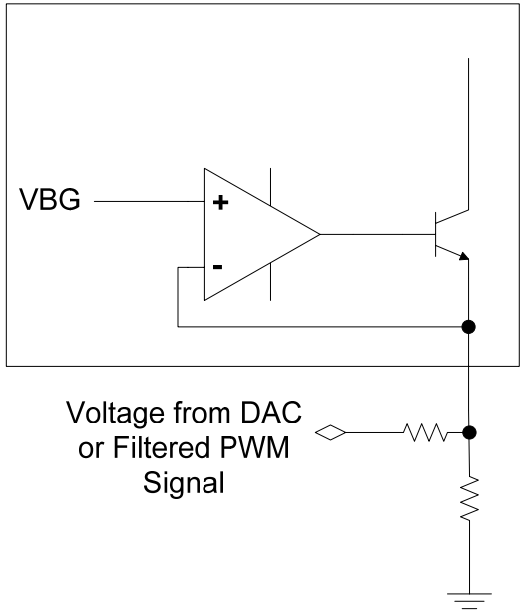

Control with a Voltage DAC

•Using a Voltage DAC to control the pins is shown below.

V1 > VPIN

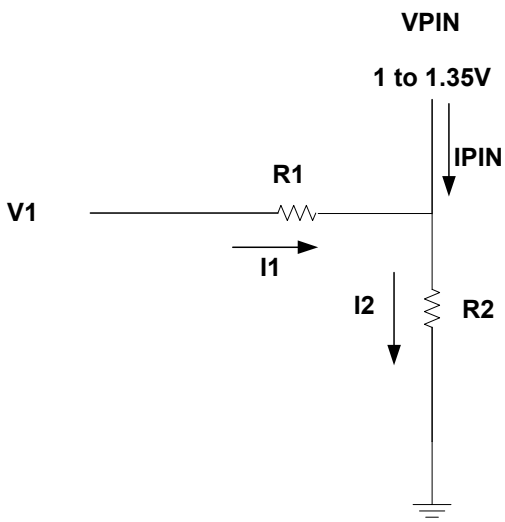

IPIN = I2 - I1

Example: R1=R2=11KΩ
VPIN=1.25V, V1=2V
IPIN = 1.25/11kΩ – 0.75/11kΩ = 45µA

V1 < VPIN

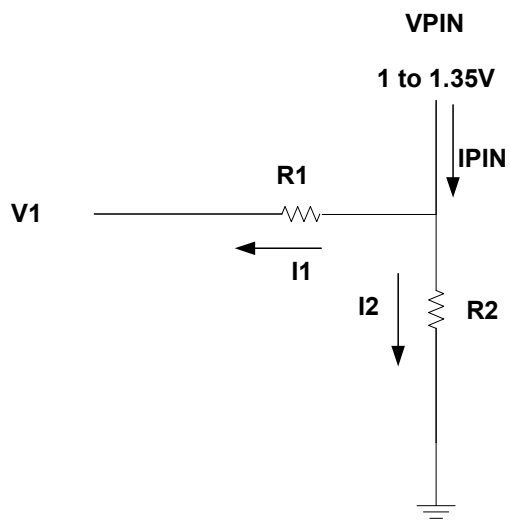

IPIN = I1 + I2

Example: R1=R2=11KΩ
VPIN=1.25V, V1=1V
IPIN = 0.25/11kΩ + 1.25/11kΩ = 136µA

Note that IPIN = 400µA will cause maximum bias current or modulation current.

Control with a Voltage DAC

- **R1 and R2 were set to 11kΩ and a power supply was used to show the concept.**

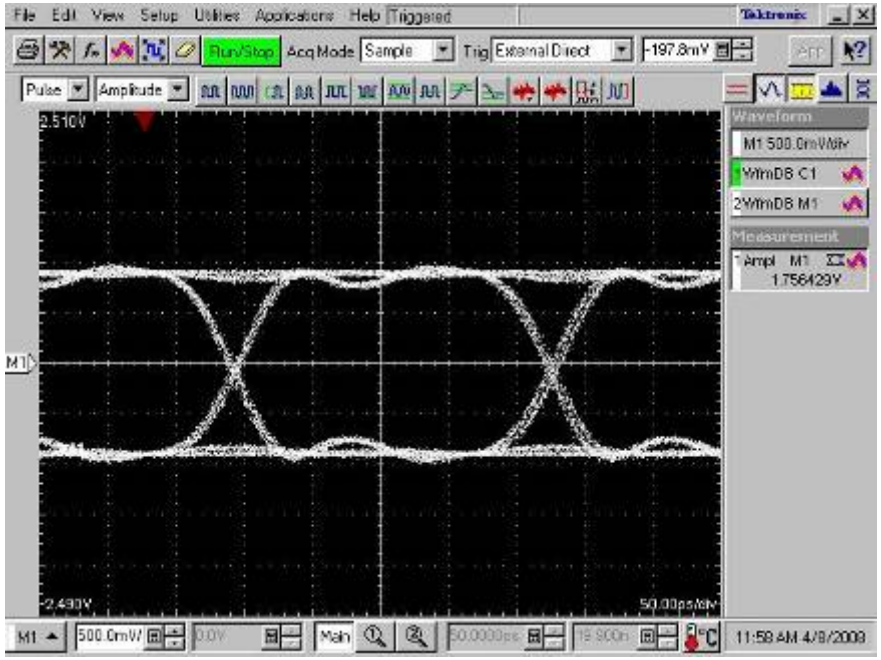

V1 = 0V

$V_{OUT} = 1.76V_{PP}$

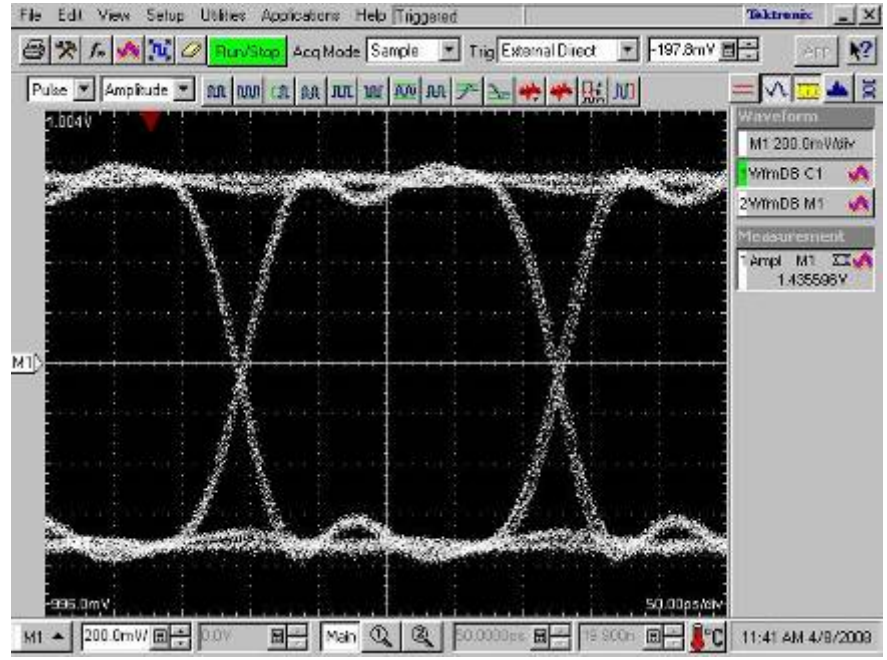

V1 = 0.4V

$V_{OUT} = 1.44V_{PP}$

Control with a Voltage DAC

- **R1 and R2 were set to 11kΩ and a power supply was used to show the concept.**

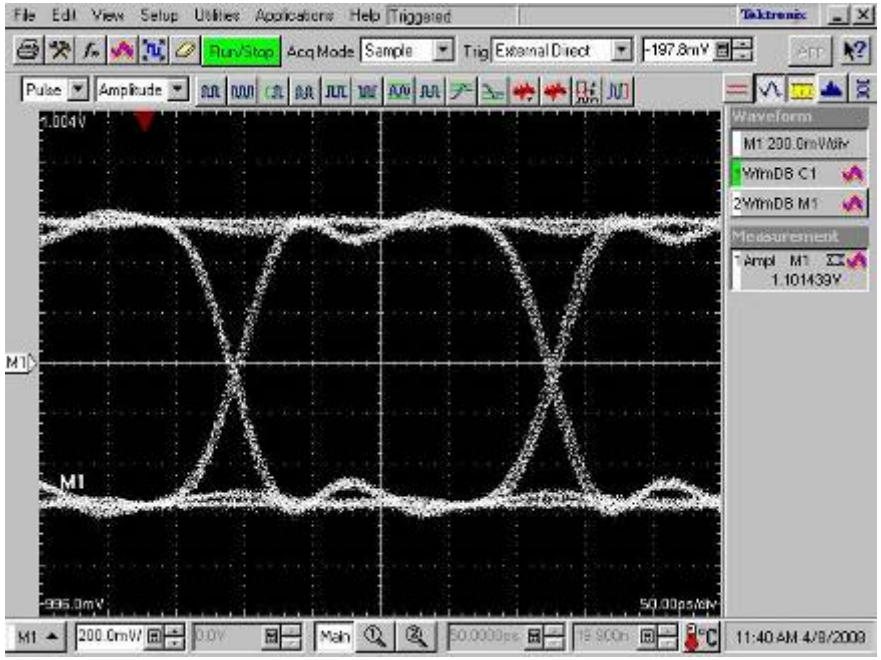

V1 = 0.8V

$V_{OUT} = 1.1V_{PP}$

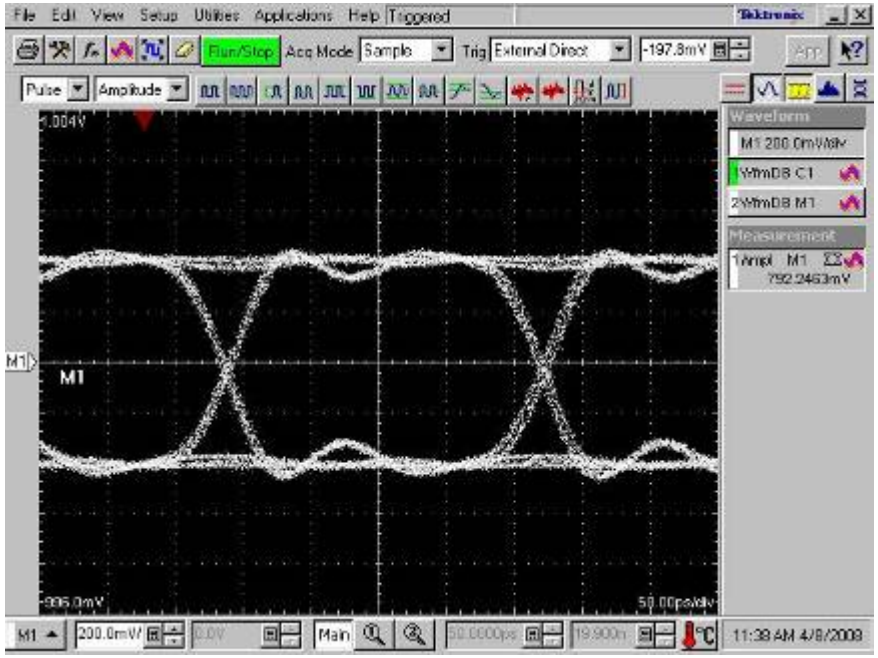

V1 = 1.2V

$V_{OUT} = 0.79V_{PP}$

Control with a Voltage DAC

- **R1 and R2 were set to 11kΩ and a power supply was used to show the concept.**

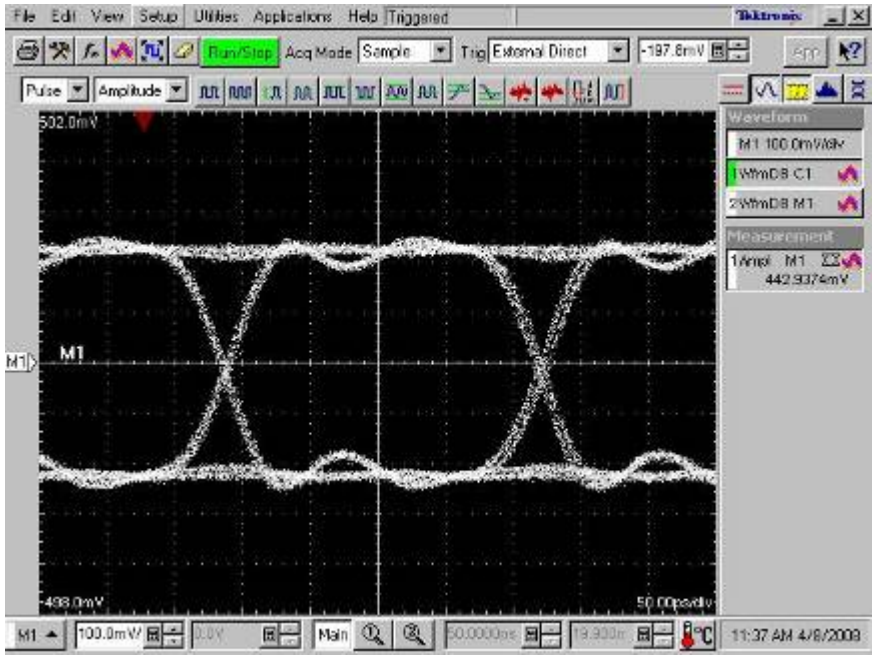

V1 = 1.6V

$V_{OUT} = 0.44V_{PP}$

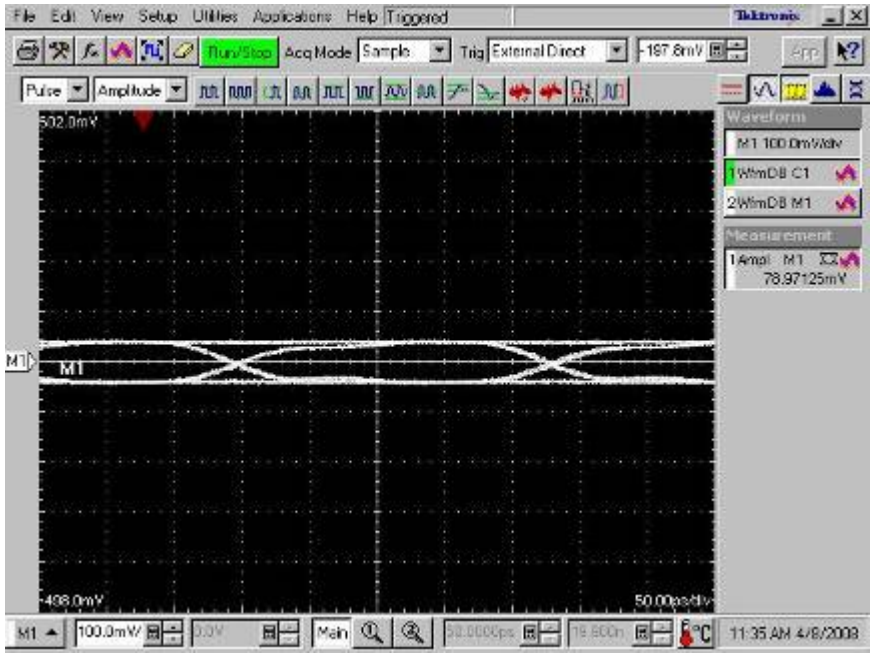

V1 = 2.0V

$V_{OUT} = 0.079V_{PP}$

Control with a Filtered PWM Signal

•Using a filtered PWM Signal to control the pins is shown below.

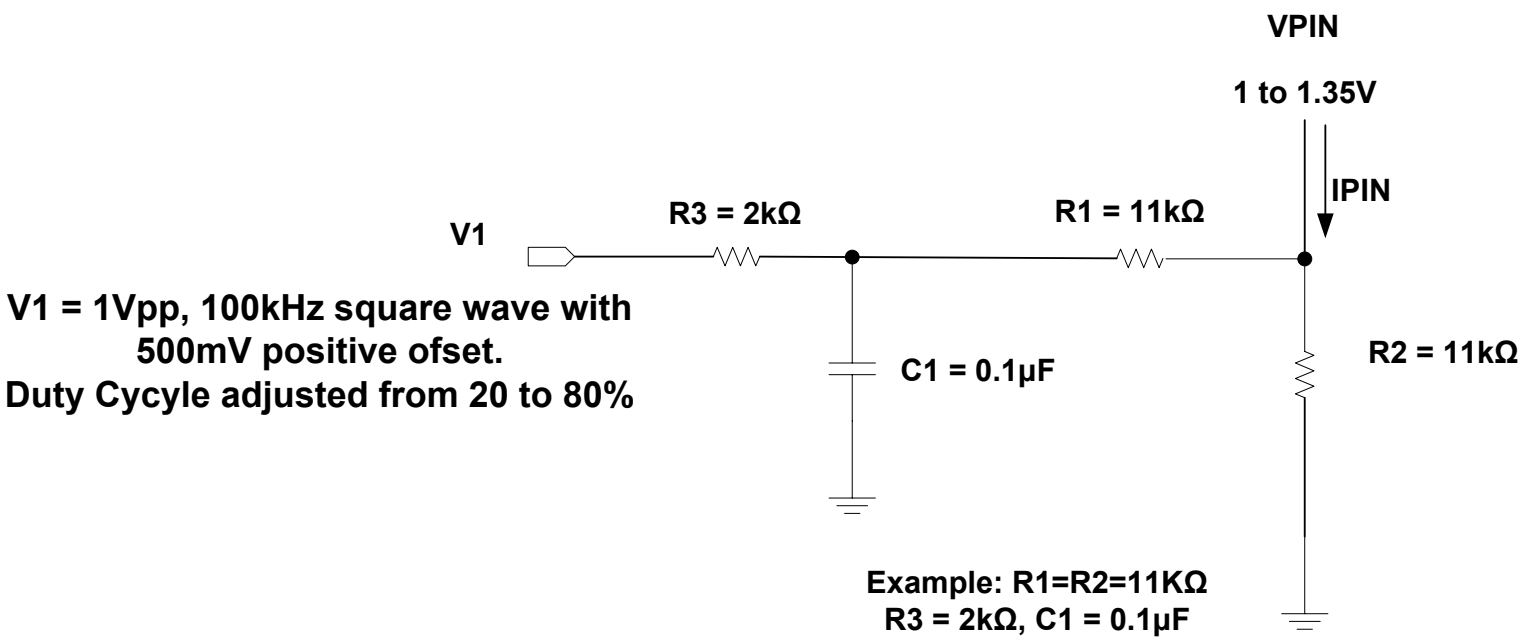

V1 = 1Vpp, 100kHz square wave with 500mV positive ofset.
Duty Cycyle adjusted from 20 to 80%

Control with a Filtered PWM Signal

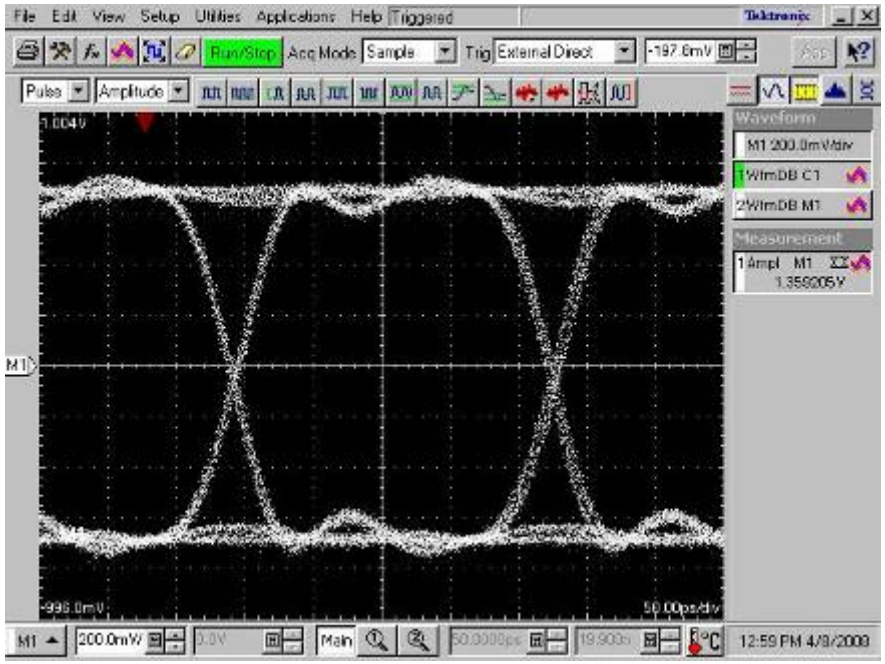

Duty Cycle = 20%

$V_{OUT} = 1.34V_{PP}$

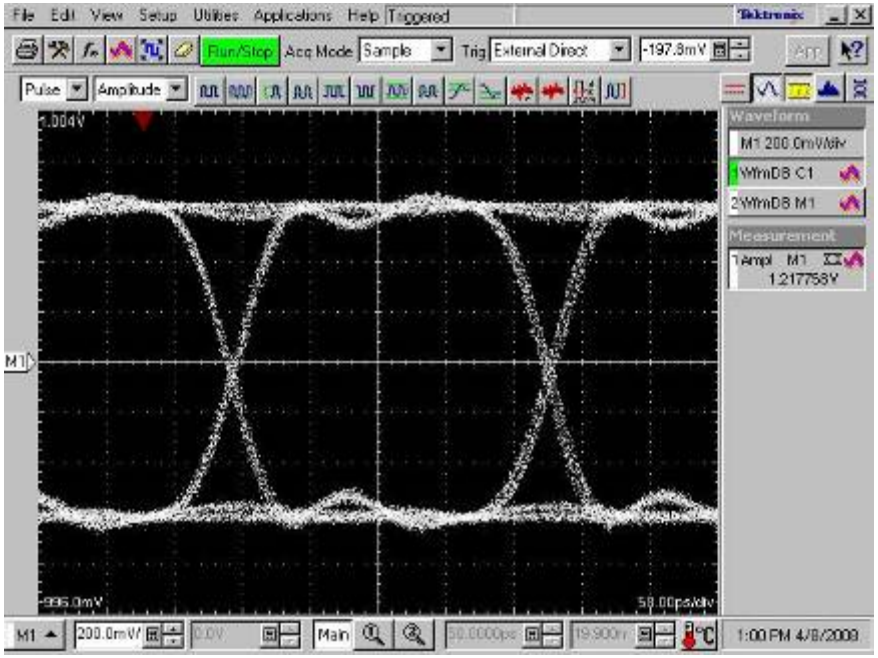

Duty Cycle = 30%

$V_{OUT} = 1.22V_{PP}$

Control with a Filtered PWM Signal

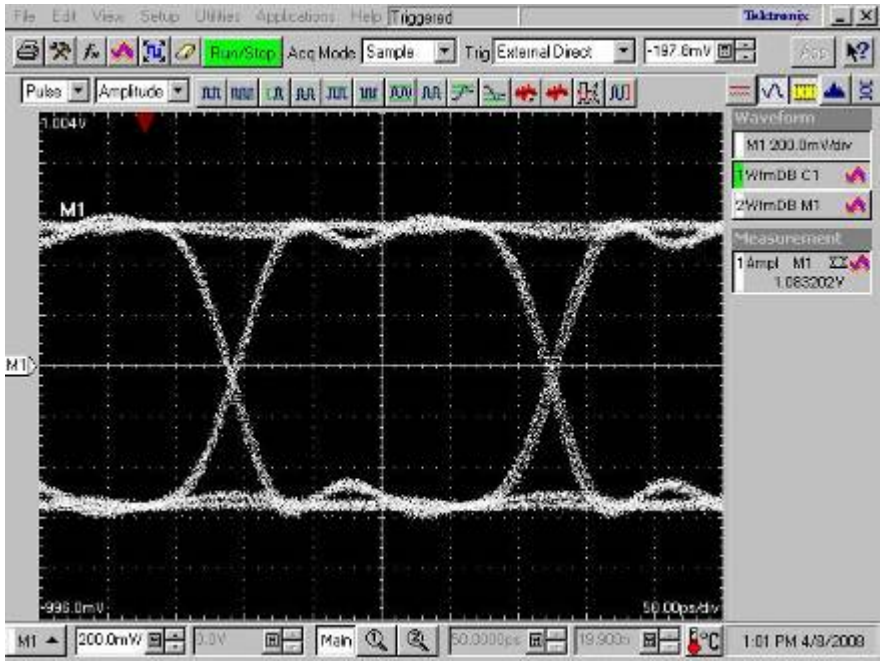

Duty Cycle = 40%

$V_{OUT} = 1.08V_{PP}$

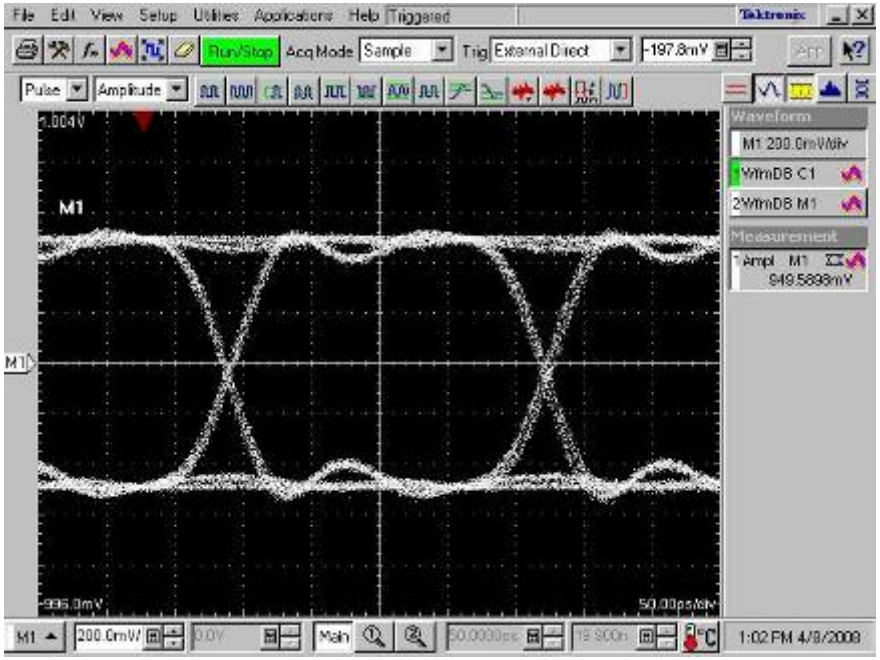

Duty Cycle = 50%

$V_{OUT} = 0.95V_{PP}$

Control with a Filtered PWM Signal

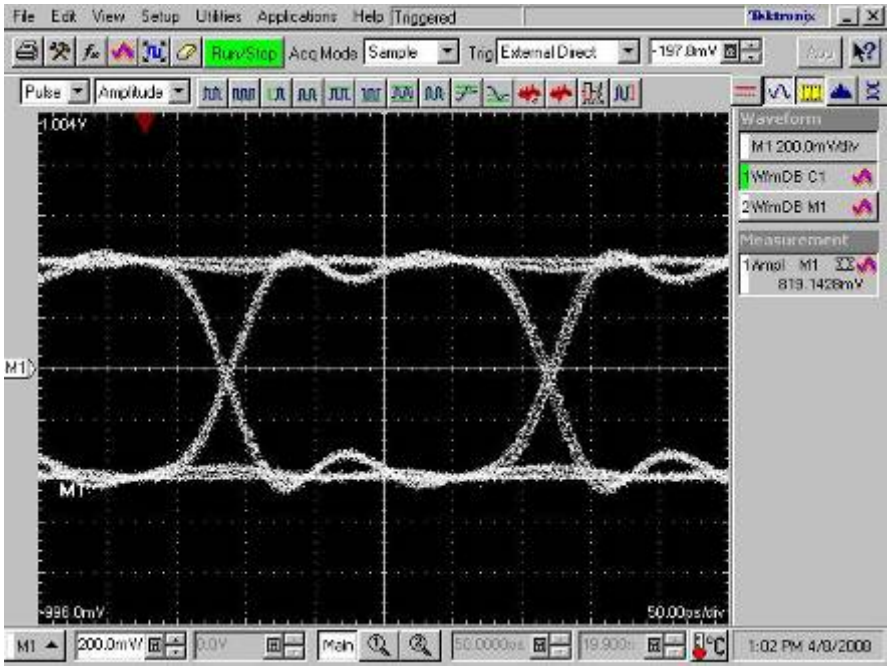

Duty Cycle = 60%

$V_{OUT} = 0.82V_{PP}$

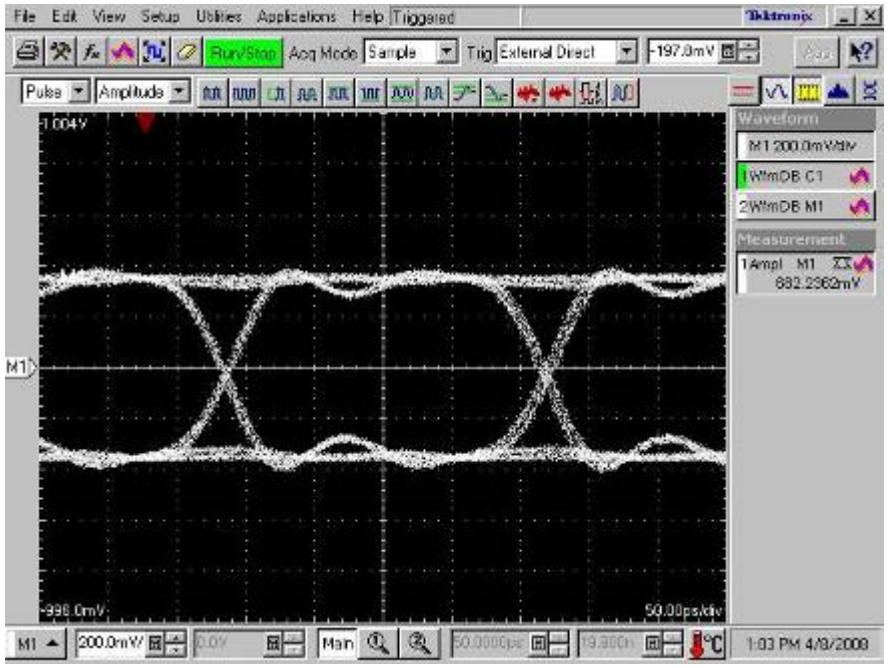

Duty Cycle = 70%

$V_{OUT} = 0.68V_{PP}$

Control with a Filtered PWM Signal

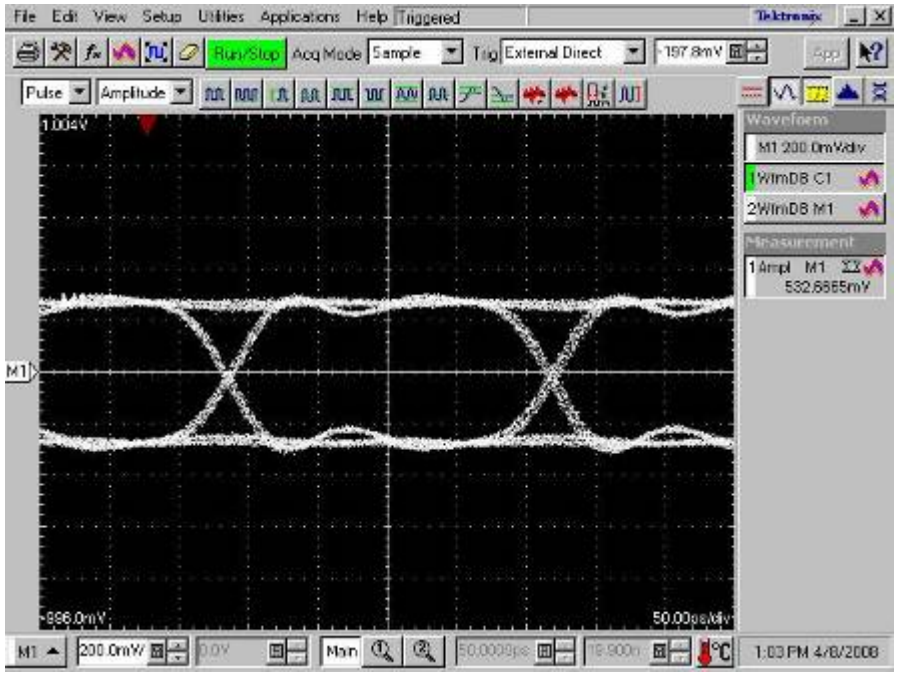

Duty Cycle = 80%

$V_{OUT} = 0.53V_{PP}$

Summary

1. Control of the ONET4211LD is possible with a voltage DAC.
2. Control of the ONET4211LD is possible with a filtered PWM signal and an op-amp was not required to buffer the filtered PWM signal.
3. By varying the resistor values, the range of control can be optimized for the particular application.