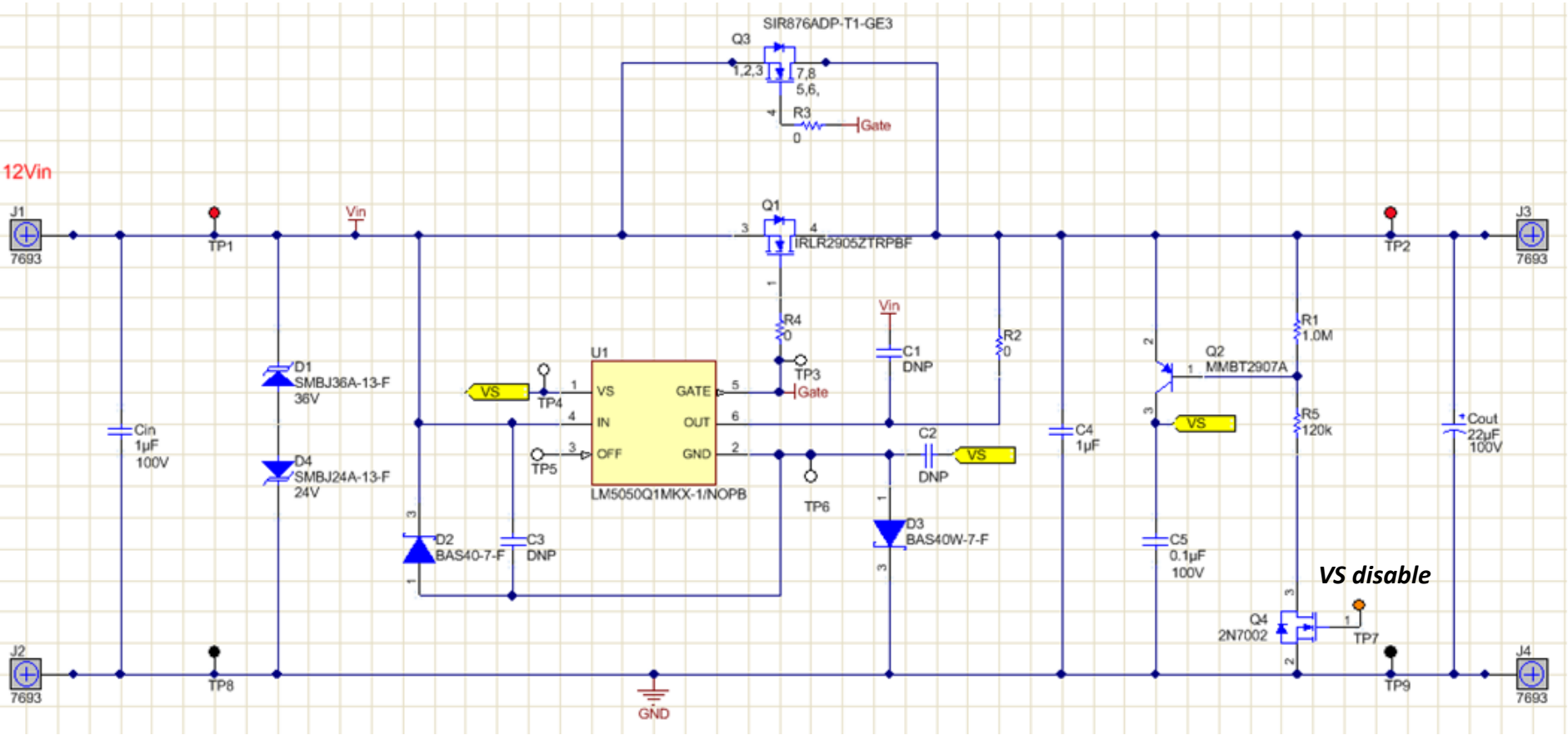
SIR876ADP-T1-GE3
Q3
1,2,3
7,8
5,6,
R3
0
Gate
12Vin
J1
7693
TP1
Vin
Q1
IRLR2905ZTRPBF
TP2
J3
7693
R4
0
TP3
Gate
Vin
C1
DNP
R2
0
U1
VS
TP4
VS
GATE
IN
OUT
OFF
GND
LM5050Q1MKX-1/NOPB
TP5
TP6
C2
DNP
VS
C4
1µF
Q2
MMBT2907A
R1
1.0M
R5
120k
VS
Cout
22µF
100V
D1
SMBJ36A-13-F
36V
Cin
1µF
100V
D4
SMBJ24A-13-F
24V
D2
BAS40-7-F
C3
DNP
D3
BAS40W-7-F
C5
0.1µF
100V
VS disable
Q4
2N7002
TP7
J2
7693
TP8
GND
TP9
J4
7693