REVISIONS			
REV	DESCRIPTION	DATE	APPROVED

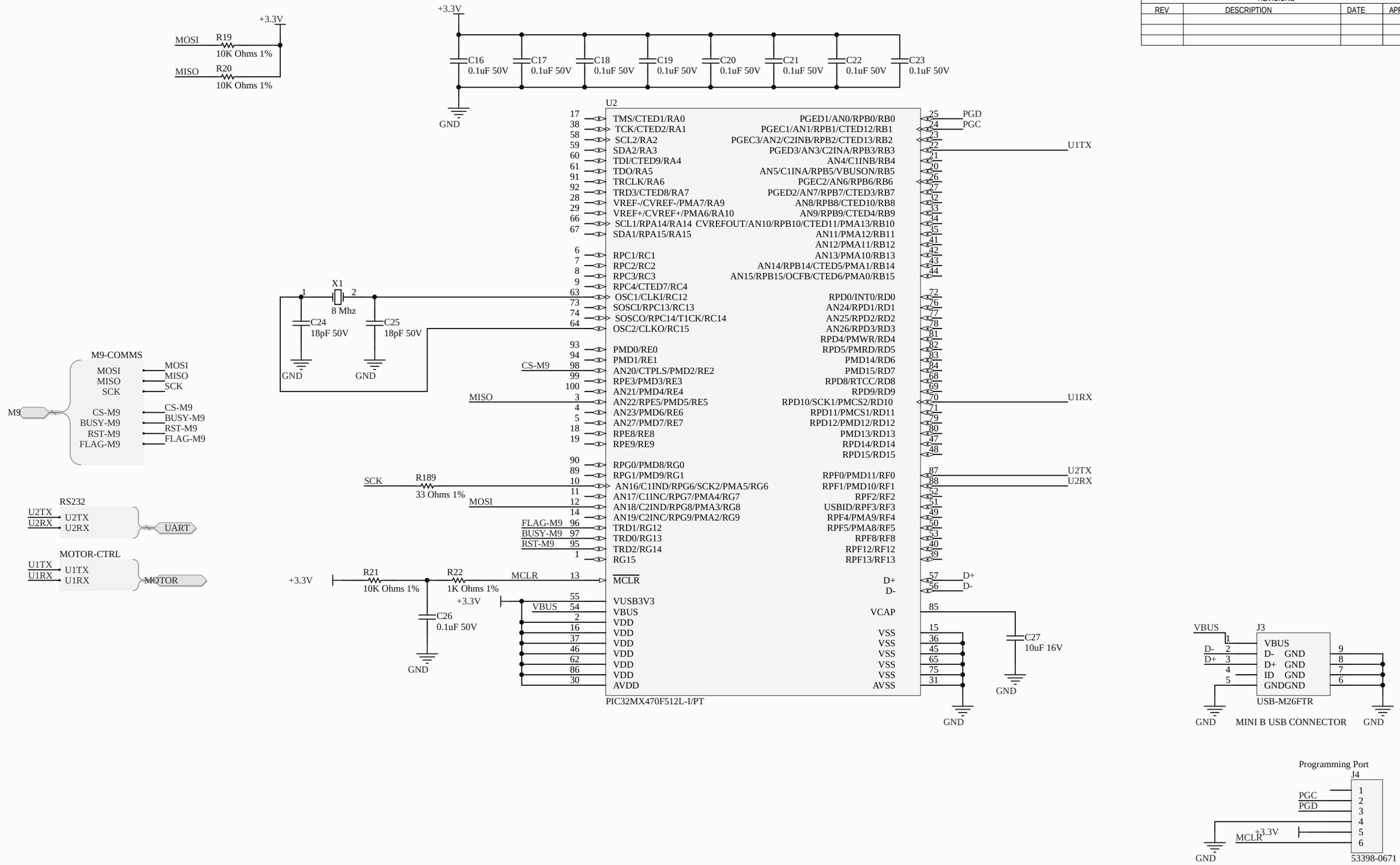

Title *		
Size B	Document Number *	Rev *
Date 4/13/2018	Drawn by *	
Filename 0166-MotorDrive_REV0_CPU.SchDoc	Sheet *	of *

REVISIONS			
REV	DESCRIPTION	DATE	APPROVED

MOTOR 1

Address
0001 = M1
0010 = M2
0011 = M3
0100 = M4
0101 = M5
0110 = M6
0111 = M7
1000 = M8
1010 = M10

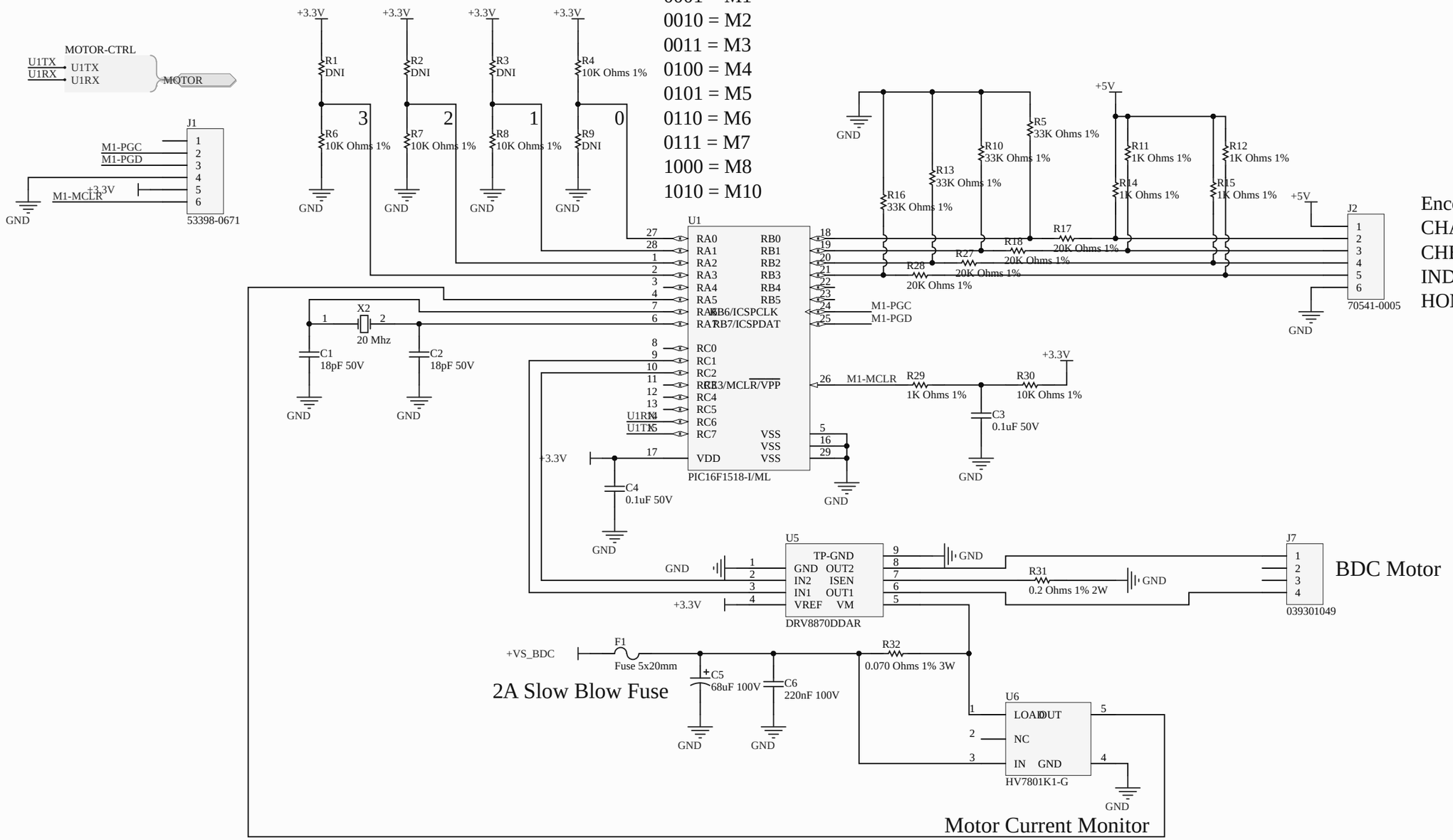

Title *			
Size B	Document Number *		Rev *
Date 4/13/2018	Drawn by *		
Filename 0166-MotorDrive_REV0_M1.SchDoc		Sheet *	of *

REVISIONS			
REV	DESCRIPTION	DATE	APPROVED

MOTOR 10

Address
0001 = M1
0010 = M2
0011 = M3
0100 = M4
0101 = M5
0110 = M6
0111 = M7
1000 = M8
1010 = M10

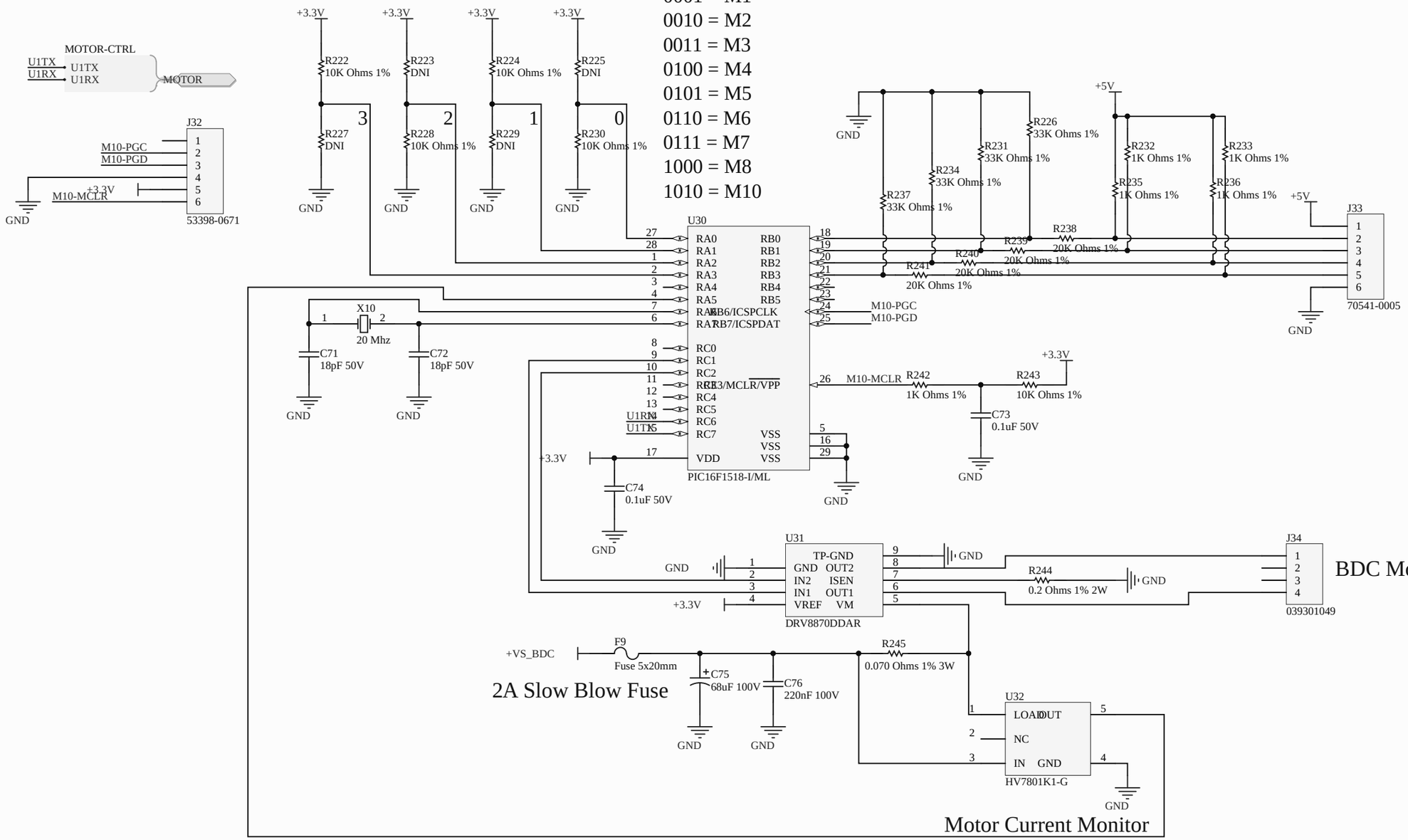

Title *			
Size B	Document Number *		Rev *
Date 4/13/2018	Drawn by *		
Filename 0166-MotorDrive_REV0_M10.SchDoc		Sheet *	of *

REVISIONS			
REV	DESCRIPTION	DATE	APPROVED

MOTOR 2

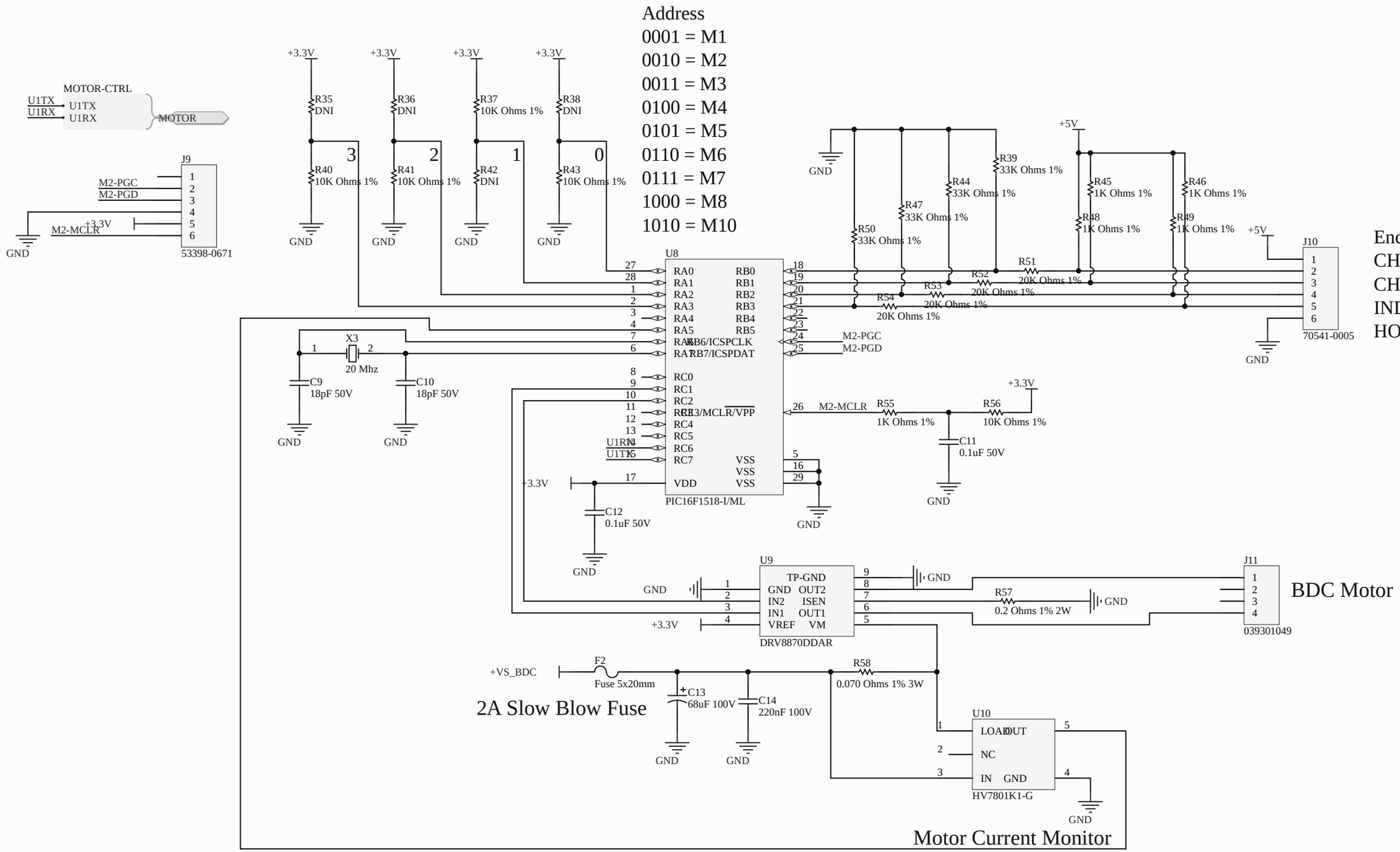

Title *			
Size B	Document Number *		Rev *
Date 4/13/2018	Drawn by *		
Filename 0166-MotorDrive_REV0_M2.SchDoc		Sheet *	of *

REVISIONS			
REV	DESCRIPTION	DATE	APPROVED

MOTOR 3

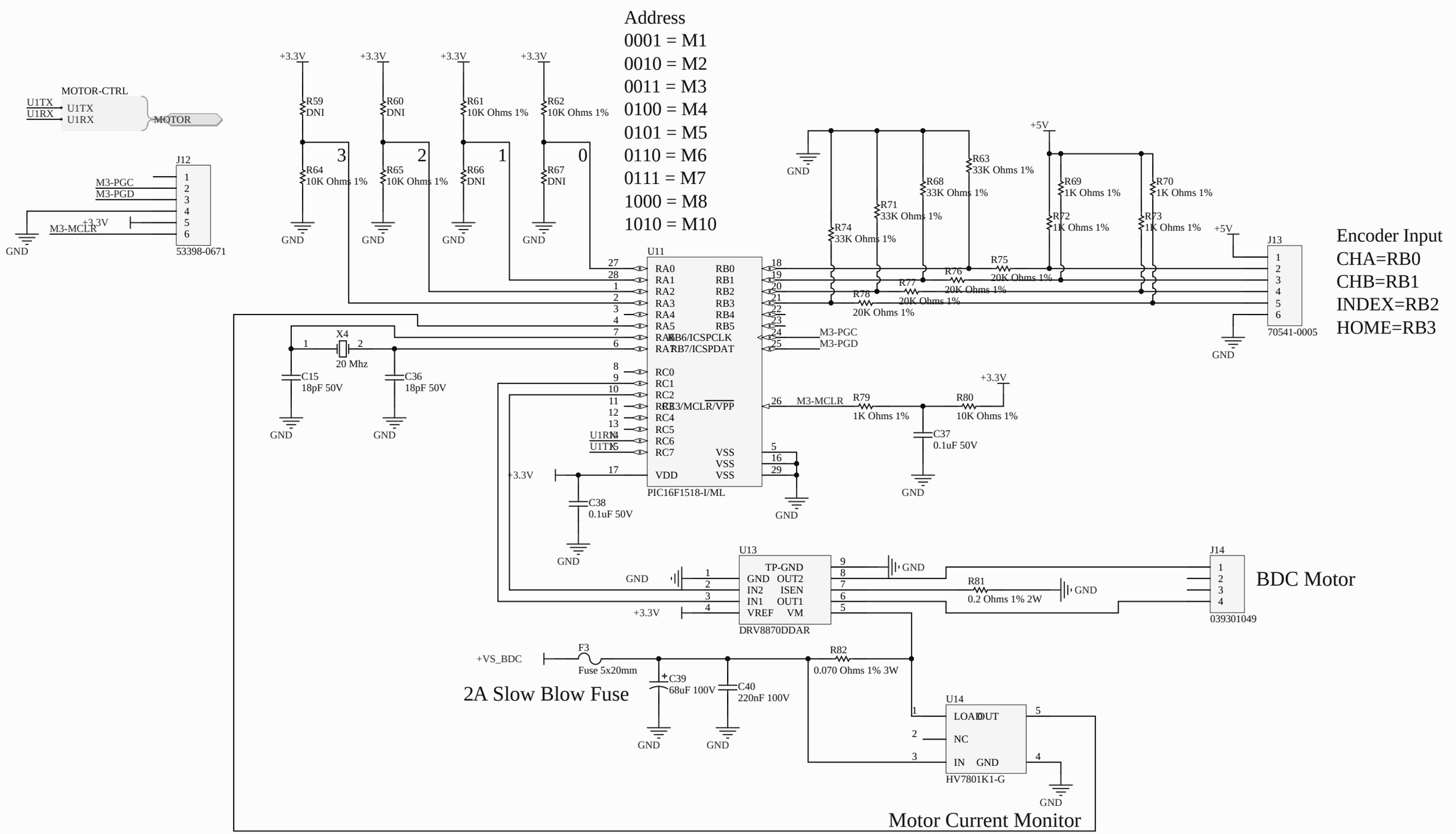

Title *			
Size B	Document Number *		Rev *
Date 4/13/2018	Drawn by *		
Filename 0166-MotorDrive_REV0_M3.SchDoc	Sheet *	of *	

REVISIONS			
REV	DESCRIPTION	DATE	APPROVED

MOTOR 4

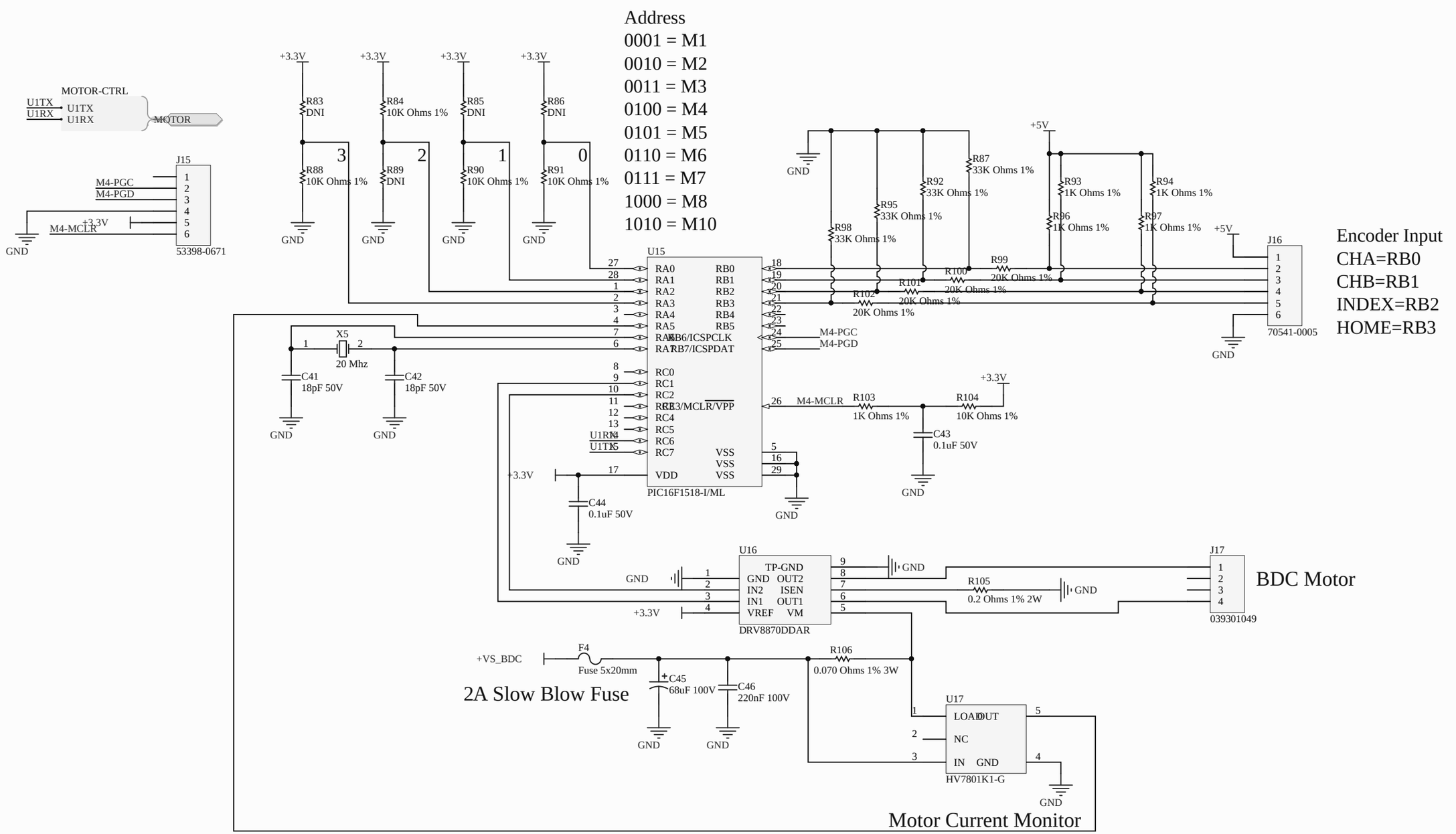

Title *			
Size B	Document Number *		Rev *
Date 4/13/2018	Drawn by *		
Filename 0166-MotorDrive_REV0_M4.SchDoc	Sheet *	of *	

REVISIONS			
REV	DESCRIPTION	DATE	APPROVED

MOTOR 5

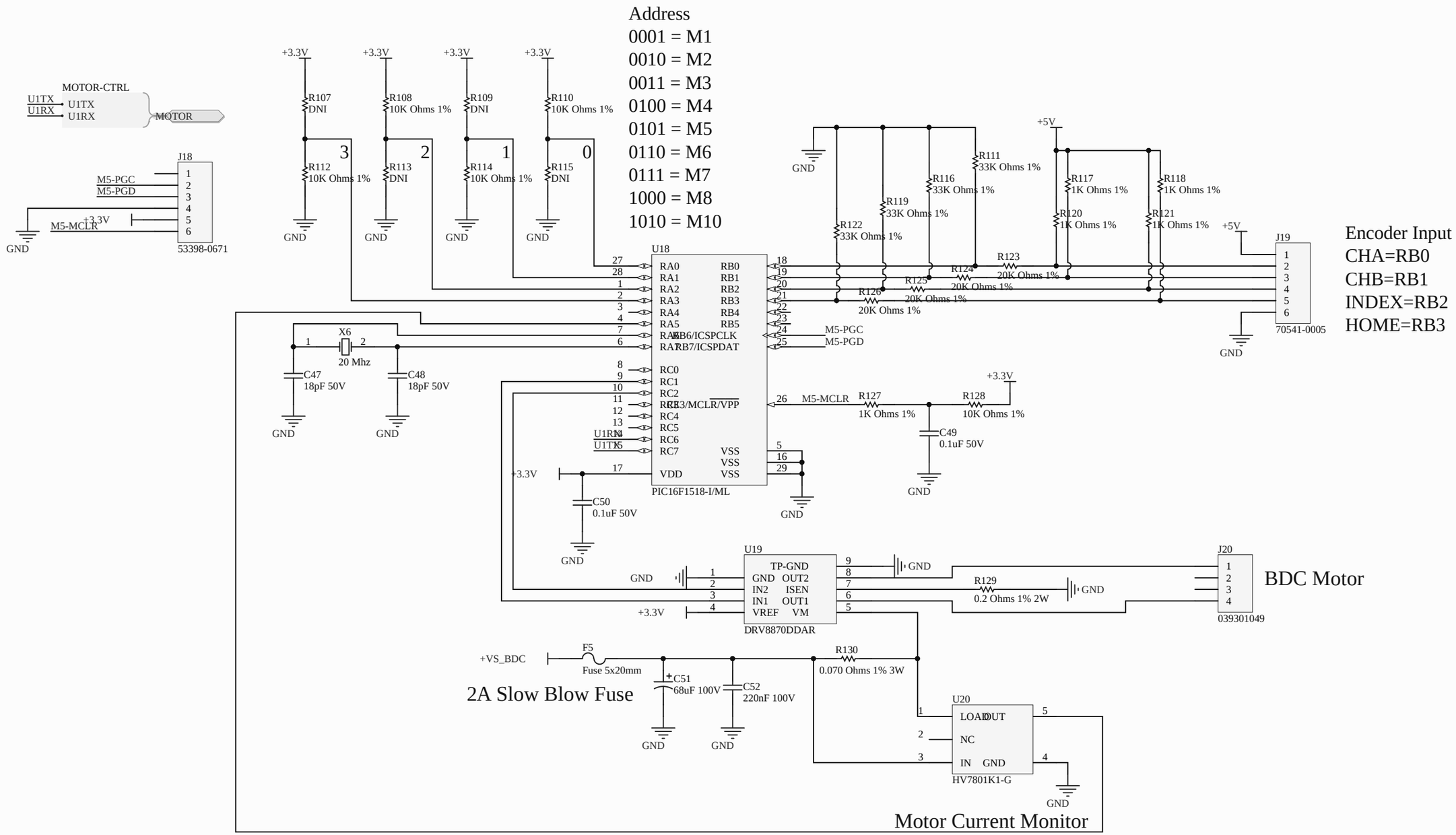

Title *			
Size B	Document Number *		Rev *
Date 4/13/2018	Drawn by *		
Filename 0166-MotorDrive_REV0_M5.SchDoc		Sheet *	of *

REVISIONS			
REV	DESCRIPTION	DATE	APPROVED

MOTOR 6

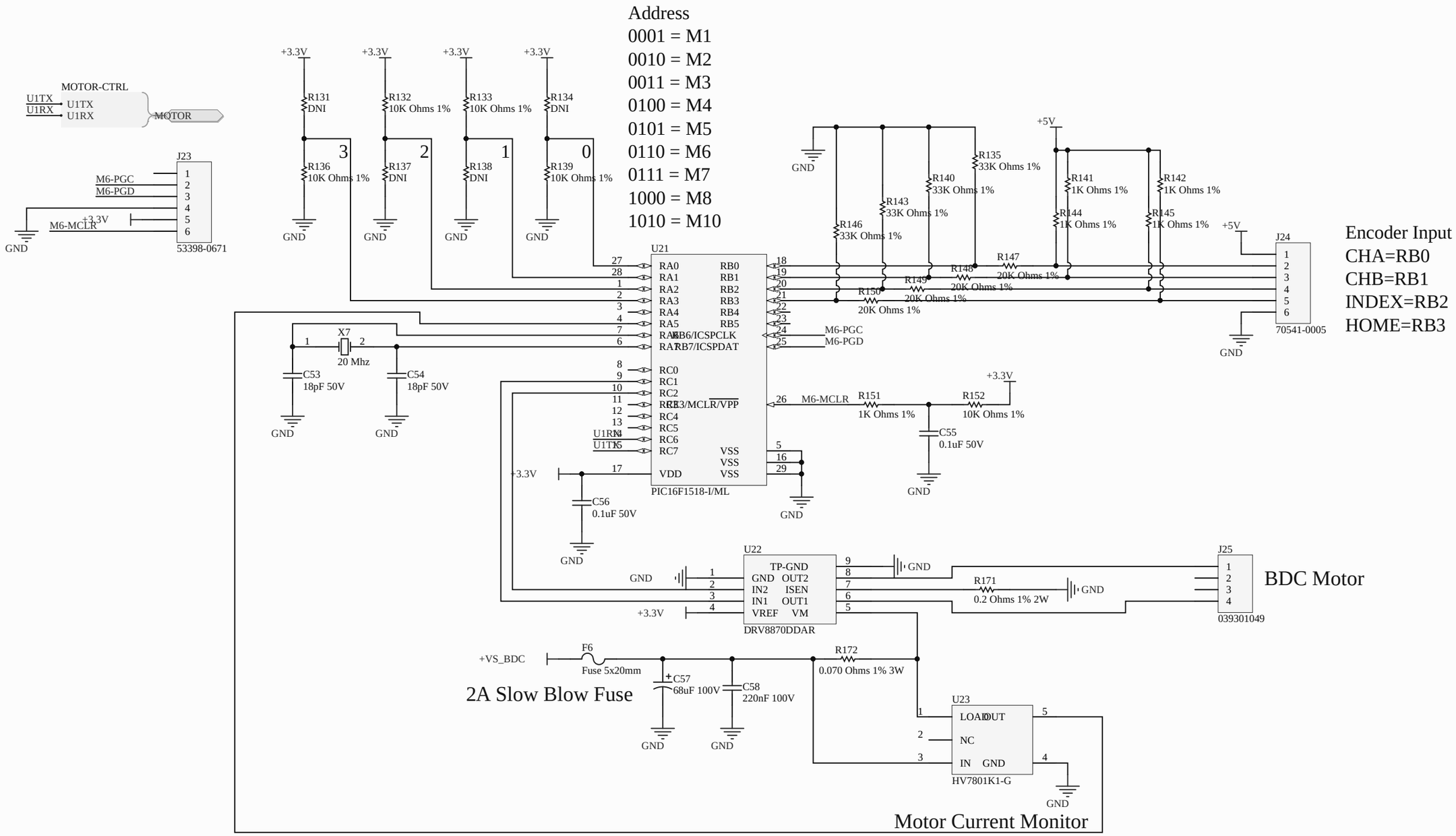

Title *			
Size B	Document Number *		Rev *
Date 4/13/2018	Drawn by *		
Filename 0166-MotorDrive_REV0_M6.SchDoc	Sheet *	of *	

REVISIONS			
REV	DESCRIPTION	DATE	APPROVED

MOTOR 7

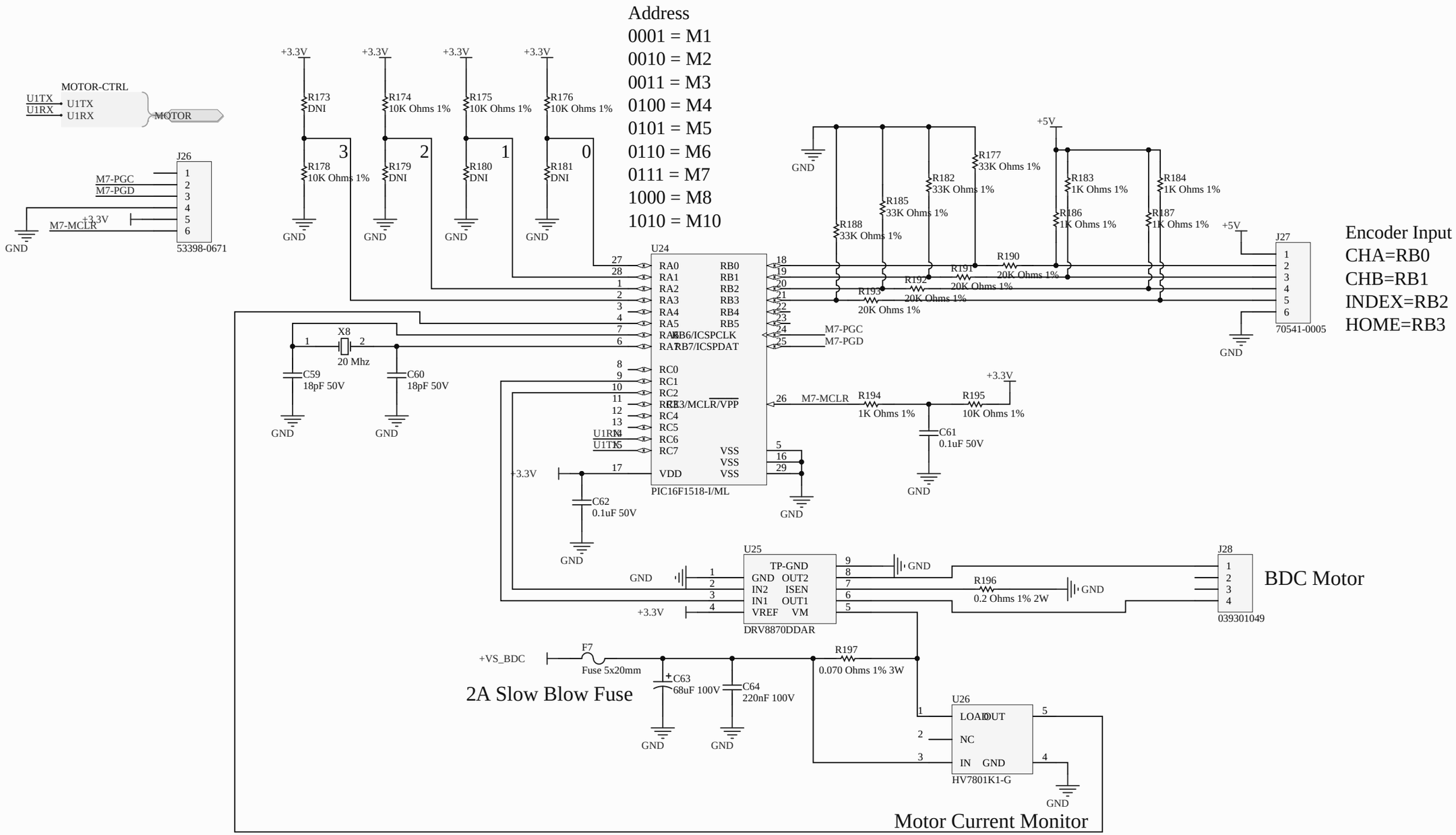

Title *			
Size B	Document Number *		Rev *
Date 4/13/2018	Drawn by *		
Filename 0166-MotorDrive_REV0_M7.SchDoc		Sheet *	of *

REVISIONS			
REV	DESCRIPTION	DATE	APPROVED

MOTOR 8

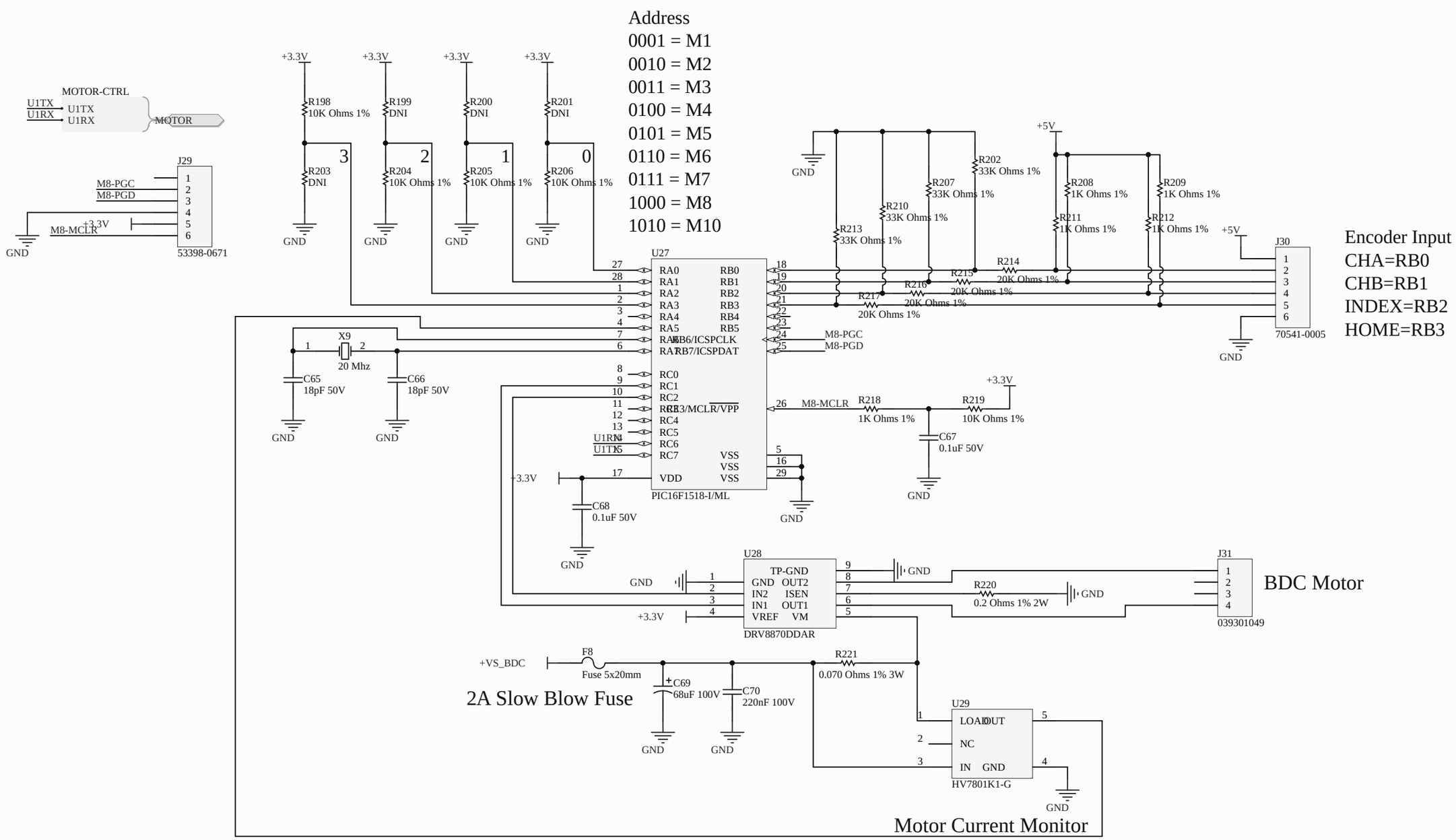

Title *			
Size B	Document Number *		Rev *
Date 4/13/2018	Drawn by *		
Filename 0166-MotorDrive_REV0_M8.SchDoc		Sheet *	of *

REVISIONS			
REV	DESCRIPTION	DATE	APPROVED

MOTOR 9

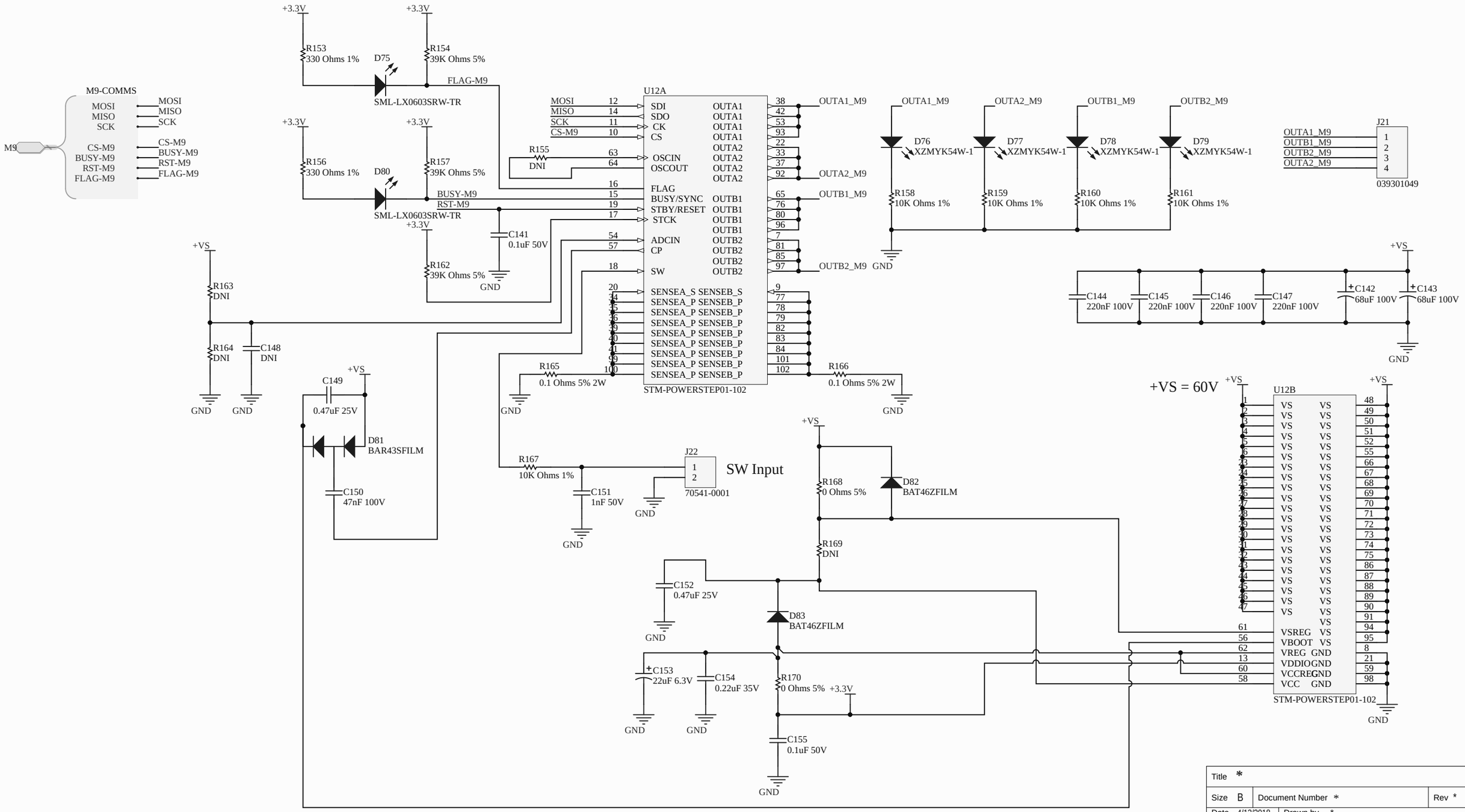

Title *			
Size B	Document Number *		Rev *
Date 4/13/2018	Drawn by *		
Filename 0166-MotorDrive_REV0_M9.SchDoc		Sheet *	of *

REVISIONS			
REV	DESCRIPTION	DATE	APPROVED

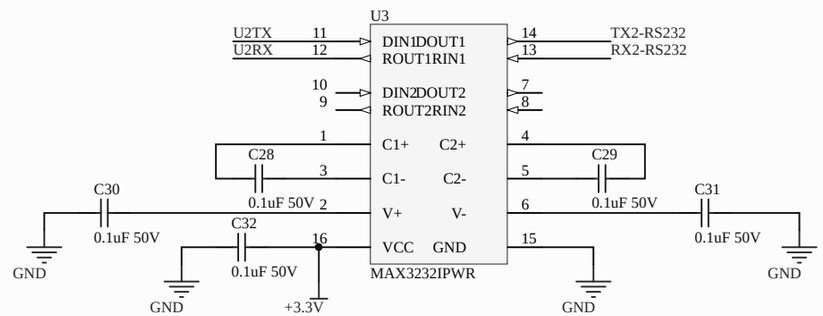

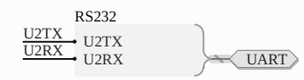

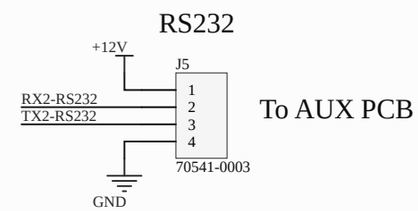

Title *		
Size B	Document Number *	Rev *
Date 4/13/2018	Drawn by *	
Filename 0166-MotorDrive_REV0_MAX3232.SchDoc	Sheet 1 of *	

REVISIONS			
REV	DESCRIPTION	DATE	APPROVED

8.5V - 17V Input Range
3.3V @ 1A

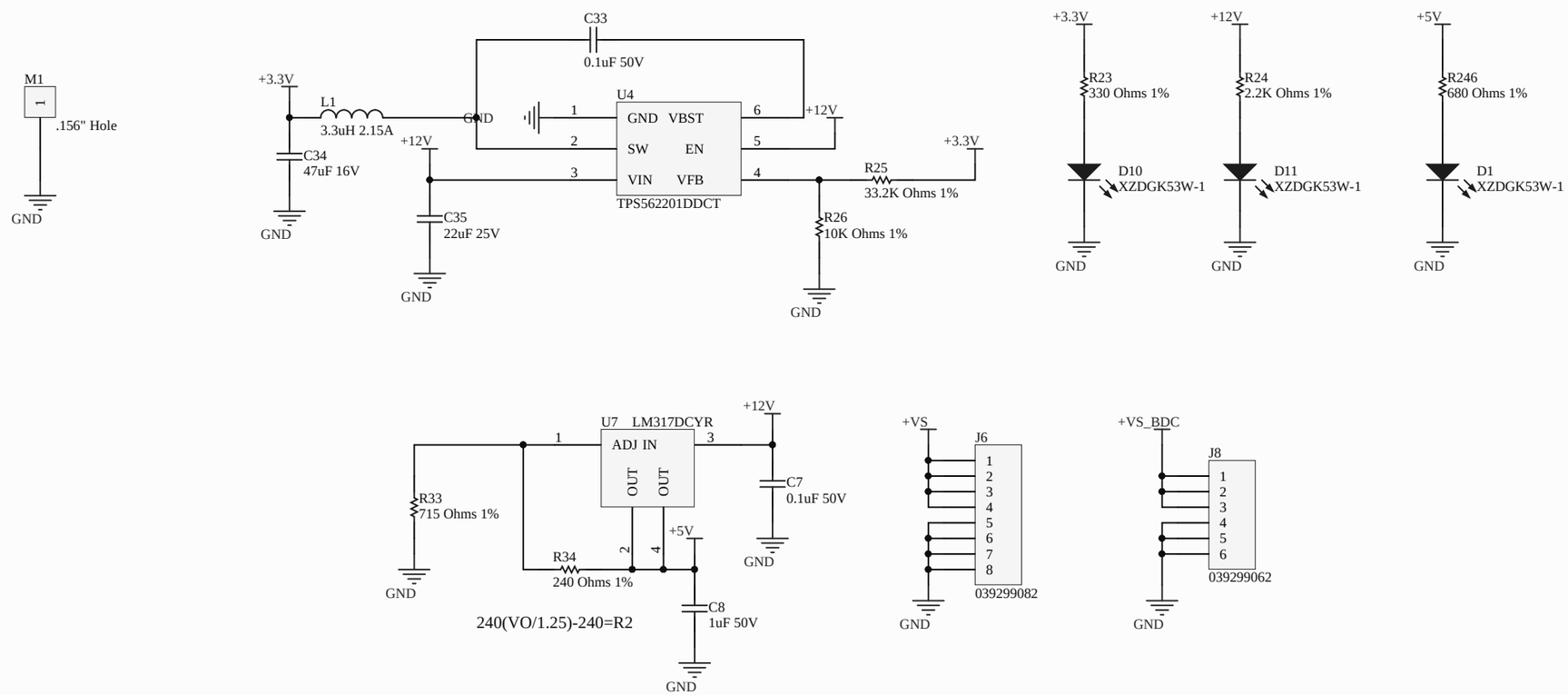

Title *			
Size B	Document Number *		Rev *
Date 4/13/2018	Drawn by *		
Filename 0166-MotorDrive_REV0_POWER.SchDoc		Sheet *	of *

SCHEMATIC PAGE NUMBER
SCHEMATIC PAGE TITLE

REVISIONS			
REV	DESCRIPTION	DATE	APPROVED

NOTES UNLESS OTHERWISE SPECIFIED:

This page is left blank intentionally.

CONFIDENTIAL PROPRIETARY INFORMATION
This document contains confidential and proprietary information of Blue Sparq, Inc. Do not copy or circulate.
Copyright 2013 Blue Sparq, Inc. All Rights Reserved

Blue Sparq Inc.
400 NW 38th Ave.
Cape Coral, FL 33993

Title *			
Size B	Document Number *		Rev A
Date 4/13/2018	Drawn by Jameel Ahed		
Filename 0166-MotorDrive_REV0_TopSheet.SchDoc		Sheet 1	of *