range of 0,3Vp 1,5Vp

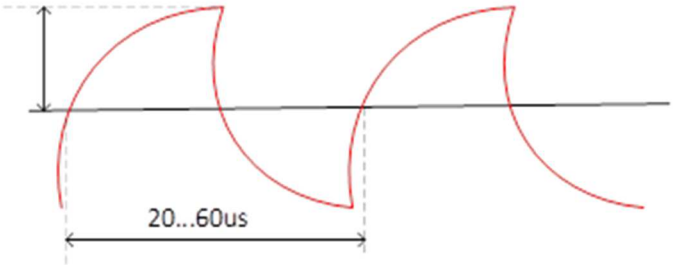

invert input signal.

Integration circuit

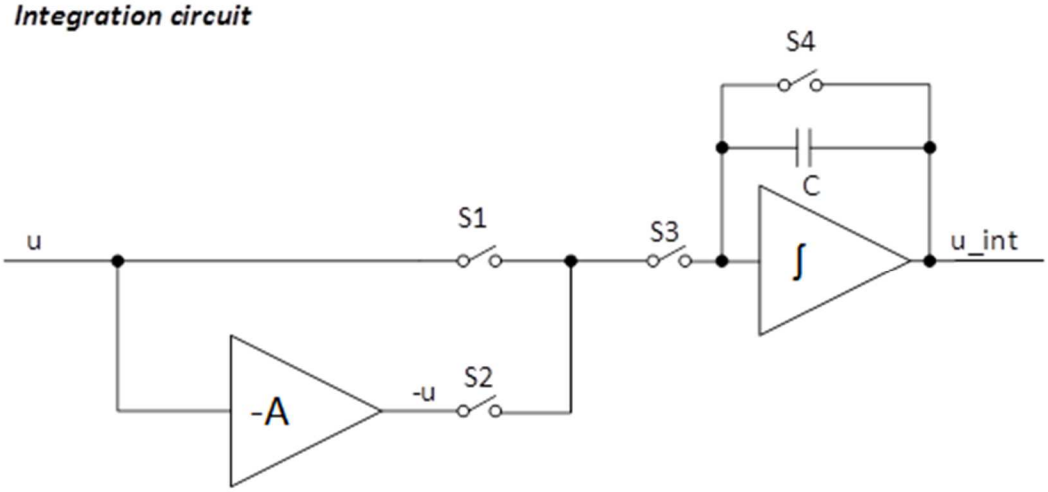

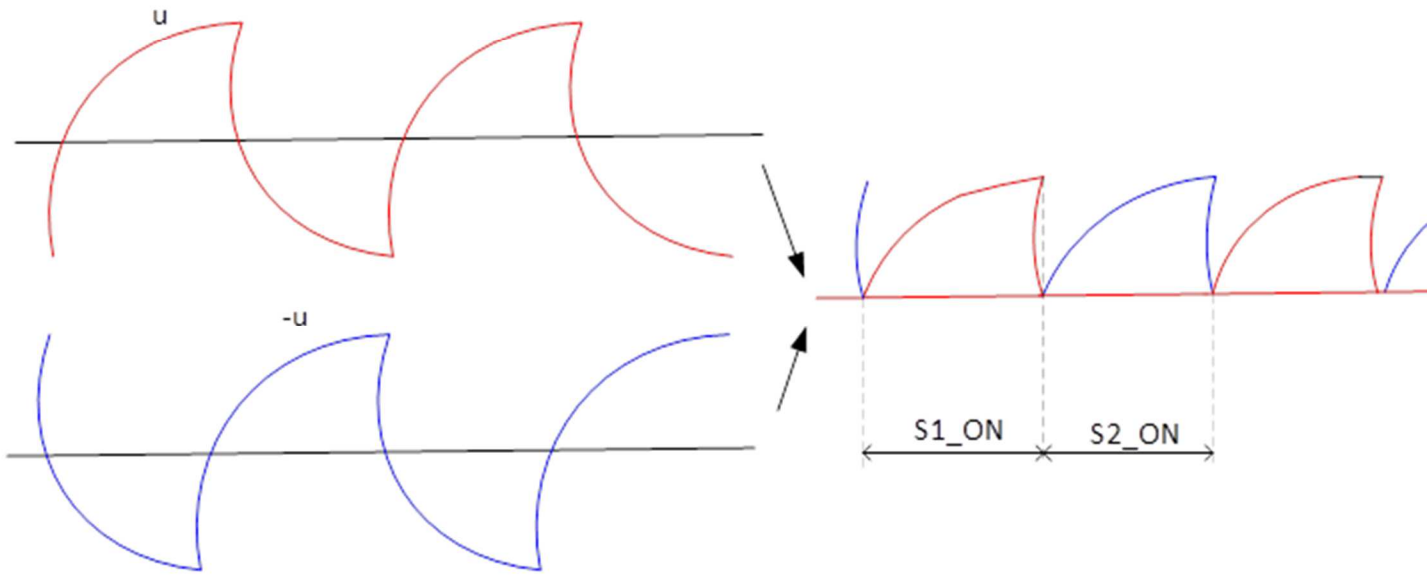

In combination with S3 and S4 we expect voltage u_int:

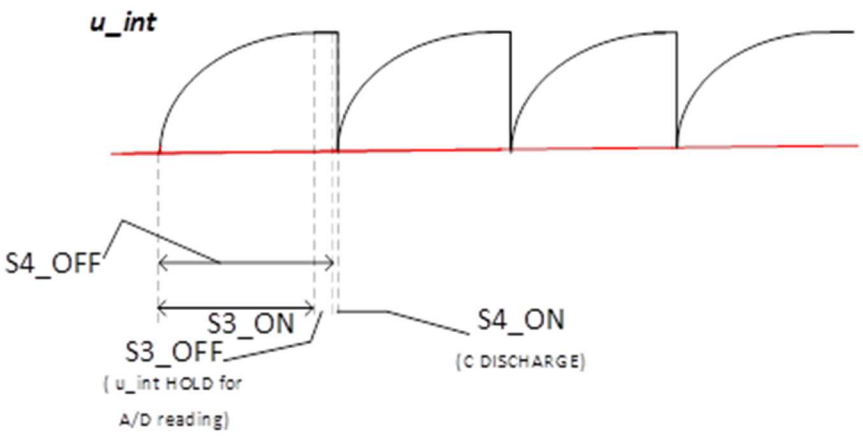
u_int
S4_OFF
S3_ON
S3_OFF
(u_int HOLD for
A/D reading)
S4_ON
(C DISCHARGE)

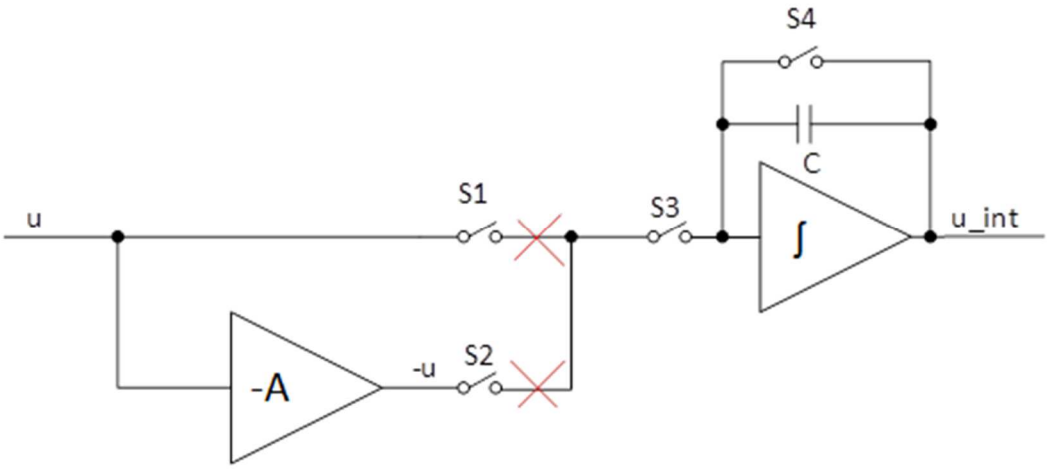
S4
C
S1
S3
u
u_int
∫
-A
-u
S2
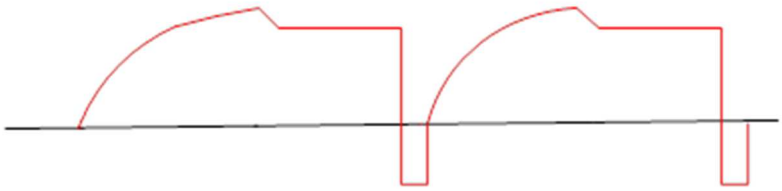
Output S1