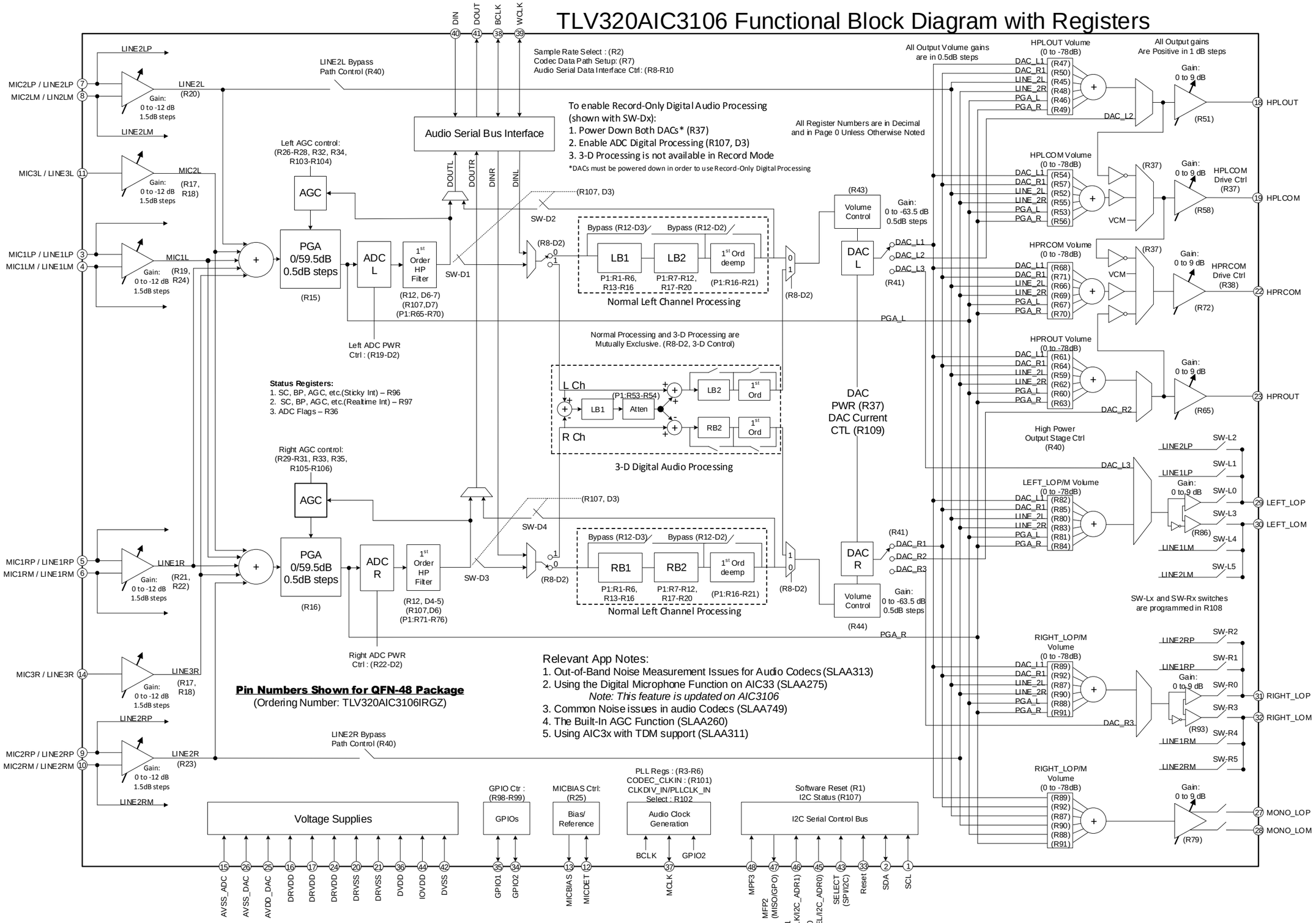TLV320AIC3106 Functional Block Diagram with Registers