REVISION RECORD			
LTR	ECO NO:	APPROVED:	DATE:

Initial version from Iview V1.2

Remove HDMI+SiI1161 and Add ICN6211 (MIPI to RGB888) 2018/12/28 Zhang Tao

Add Sheet12 U1201, Rmove J107 from RG888_SINGAL sheet 2018/12/29 Zhang Tao

Remove FAN02, added J1203 2019/01/03 Zhang Tao

Remove MSP430 debuge connector J111&J1201, and added debug test points, optical_interface sheet, J102 changed to FPC40 2019/01/03 Zhang Tao

PWR6 and U117 related components change to NC, 2019/02/14 Zhang Tao

PWR3&4 change to 12V power supply from 5V, 2019/02/18 Zhang Tao

DRAWN: Zhang Tao	DATED: 2018-12-28	COMPANY: ASU Technologies		
CHECKED: Boxie	DATED: 2016-10-9	TITLE: Fermin2 Driver Board V0.1		
QUALITY CONTROL: <QC By>	DATED: <QC Date>	CODE: <Code>	SIZE: C	DRAWING NO: Ferming2 DLPC3435+DLPA3000 / REV: V0.2
RELEASED: Tak	DATED: 2016-10-9	SCALE: <Scale>		SHEET: 1 OF 13

REVISION RECORD			
LTR	ECO NO:	APPROVED:	DATE:

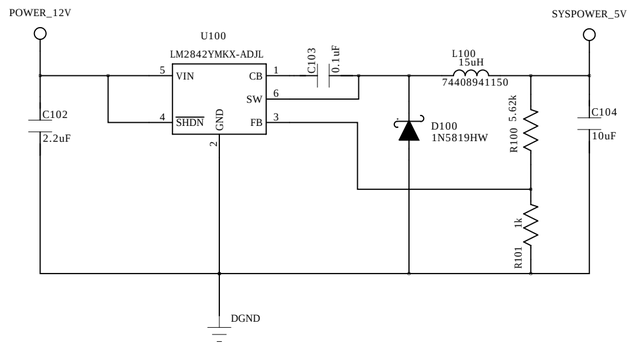

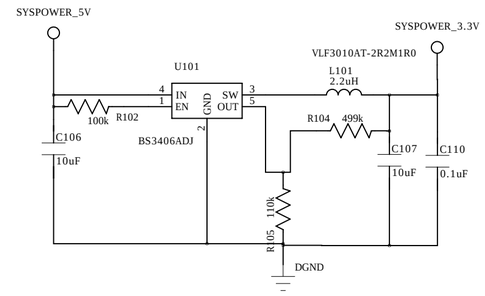

12V Input

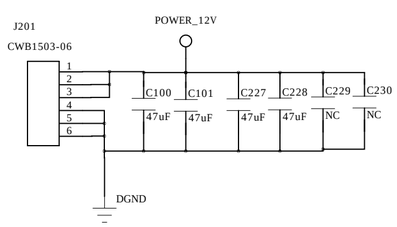

DRAWN: Zhang Tao	DATED: 2018-12-28	COMPANY: ASU Technologies	
CHECKED: Boxie	DATED: 2016-10-9	TITLE: Fermin2 Driver Board V0.1	
QUALITY CONTROL: <QC By>	DATED: <QC Date>	CODE: <Code> / SIZE: C	DRAWING NO: Ferming2 DLPC3435+DLPA3000 / REV: V0.2
RELEASED: Tak	DATED: 2016-10-9	SCALE: <Scale>	SHEET: 2 OF 13

REVISION RECORD			
LTR	ECO NO:	APPROVED:	DATE:

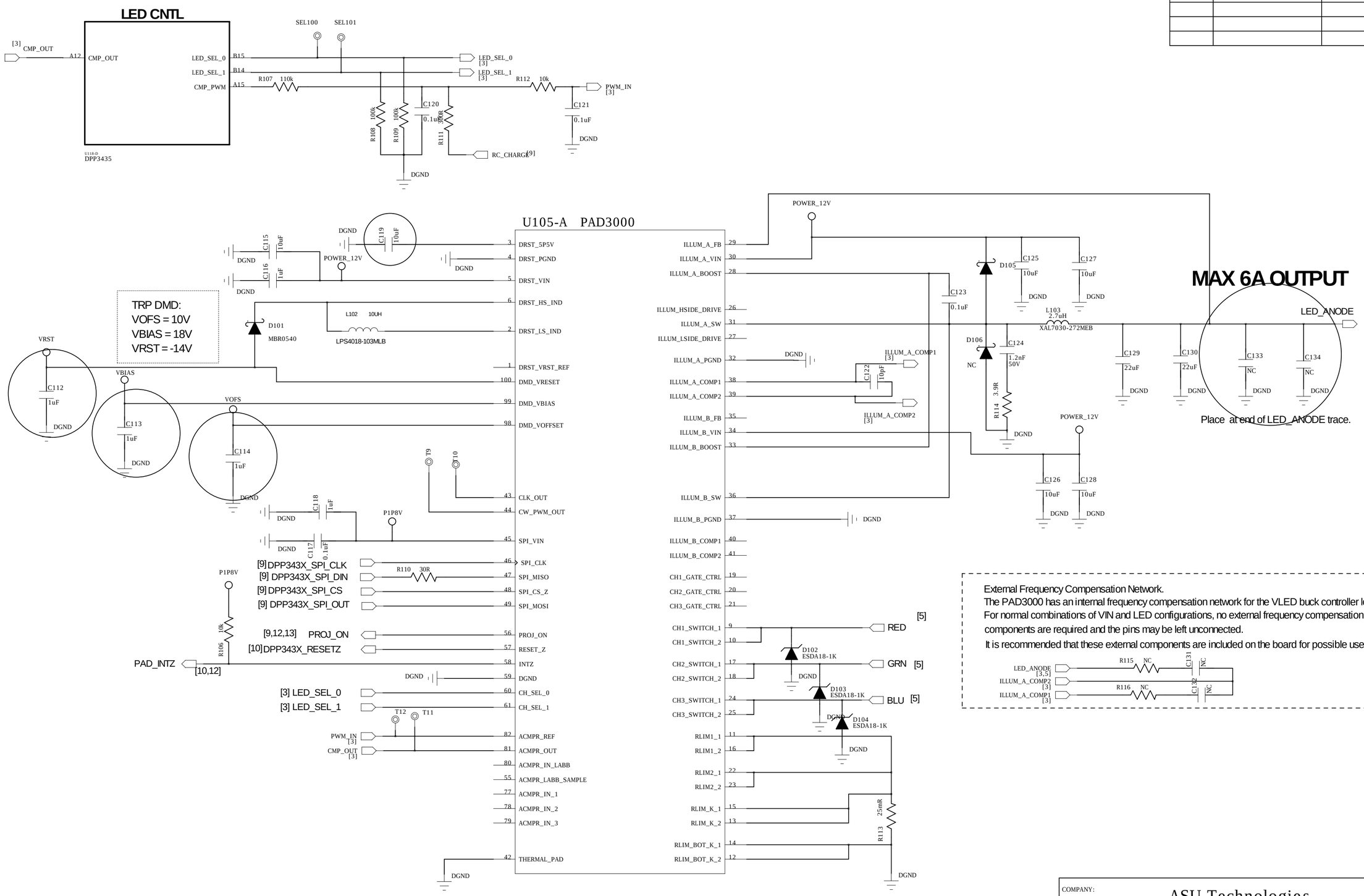

COMPANY: ASU Technologies			
TITLE: Fermin2 Driver Board V0.1			
DRAWN: Zhang Tao	DATED: 2018-12-28		
CHECKED: Boxie	DATED: 2016-10-9		
QUALITY CONTROL: <QC By>	DATED: <QC Date>		
RELEASED: Tak	DATED: 2016-10-9		
CODE: <Code>	SIZE: C	DRAWING NO: Fermin2 DLPC3435+DLPA3000	REV: V0.2
SCALE: <Scale>		SHEET: 3 OF 13	

REVISION RECORD			
LTR	ECO NO:	APPROVED:	DATE:

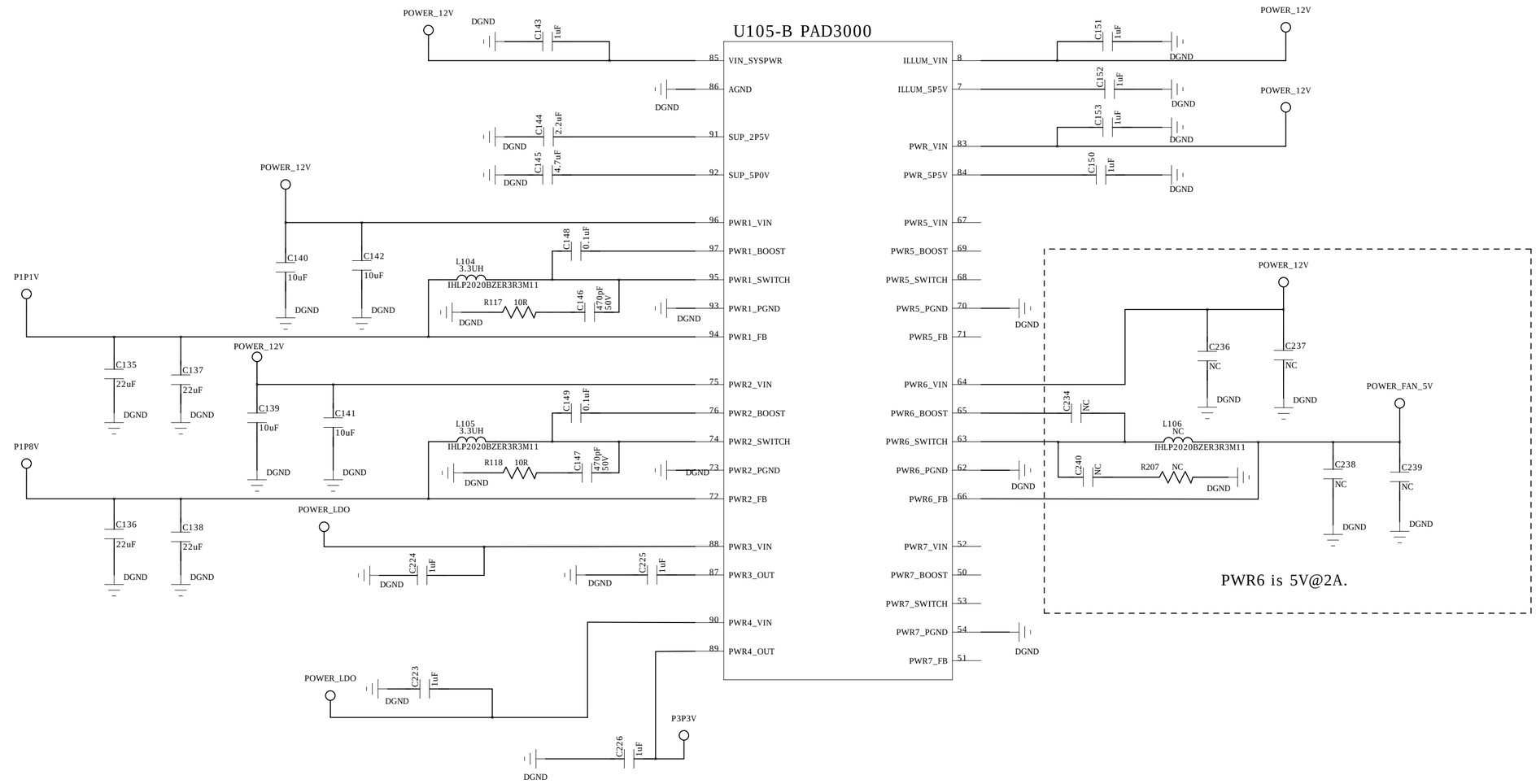

PWR4 typical out is 3.3V@340mA

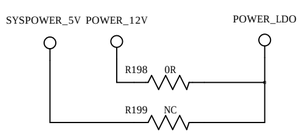

COMPANY: ASU Technologies				
TITLE: Fermin2 Driver Board V0.1				
DRAWN: Zhang Tao	DATED: 2018-12-28	CODE: <Code>	SIZE: C	DRAWING NO: Ferming2 DLPC3435+DLPA3000 / REV: V0.2
CHECKED: Boxie	DATED: 2016-10-9			
QUALITY CONTROL: <QC By>	DATED: <QC Date>			
RELEASED: Tak	DATED: 2016-10-9	SCALE: <Scale>	SHEET: 4 OF 13	

REVISION RECORD			
LTR	ECO NO:	APPROVED:	DATE:

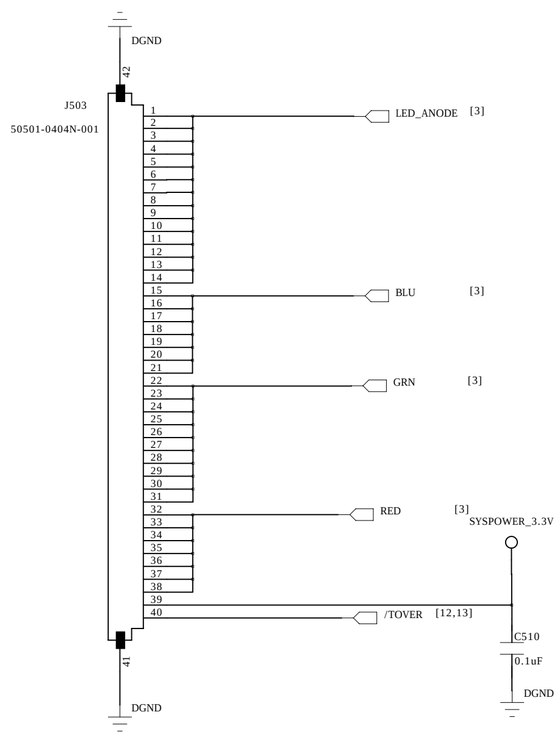

NO. J2 Brand: ACES

Part Number : Header: 50501-0400N-001-FINGERS Socket: 50501-0400N-00

Connector pins	Pin Name	Connector pins	Pin Name
1	LED_ANODE	21	BLUE_CATHODE
2	LED_ANODE	22	GRN_CATHODE
3	LED_ANODE	23	GRN_CATHODE
4	LED_ANODE	24	GRN_CATHODE
5	LED_ANODE	25	GRN_CATHODE
6	LED_ANODE	26	GRN_CATHODE
7	LED_ANODE	27	GRN_CATHODE
8	LED_ANODE	28	GRN_CATHODE
9	LED_ANODE	29	GRN_CATHODE
10	LED_ANODE	30	GRN_CATHODE
11	LED_ANODE	31	GRN_CATHODE
12	LED_ANODE	32	RED_CATHODE
13	LED_ANODE	33	RED_CATHODE
14	LED_ANODE	34	RED_CATHODE
15	BLUE_CATHODE	35	RED_CATHODE
16	BLUE_CATHODE	36	RED_CATHODE
17	BLUE_CATHODE	37	RED_CATHODE
18	BLUE_CATHODE	38	RED_CATHODE
19	BLUE_CATHODE	39	THERMISTOR_P
20	BLUE_CATHODE	40	THERMISTOR_GND

DRAWN: Zhang Tao	DATED: 2018-12-28	COMPANY: ASU Technologies		
CHECKED: Boxie	DATED: 2016-10-9	TITLE: Fermin2 Driver Board V0.1		
QUALITY CONTROL: <QC By>	DATED: <QC Date>	CODE: <Code>	SIZE: C	DRAWING NO: Ferming2 DLPC3435+DLPA3000 REV: V0.2
RELEASED: Tak	DATED: 2016-10-9	SCALE: <Scale>	SHEET: 5OF 13	

REVISION RECORD			
LTR	ECO NO:	APPROVED:	DATE:

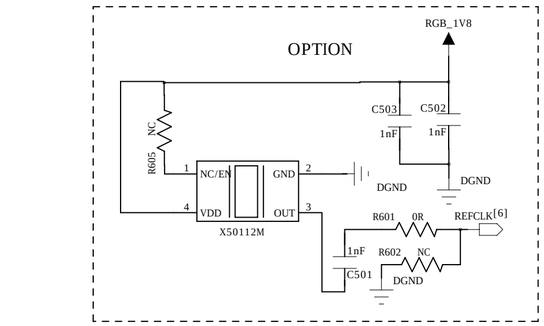

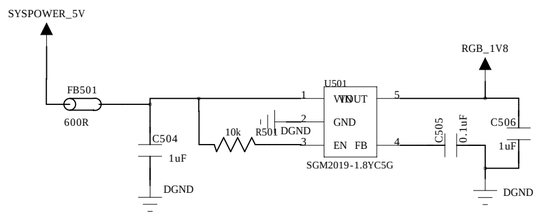

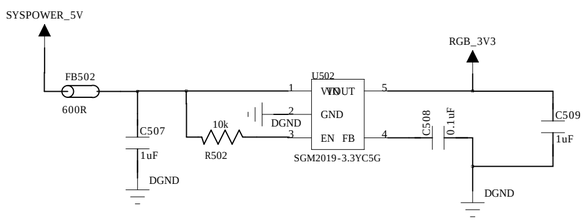

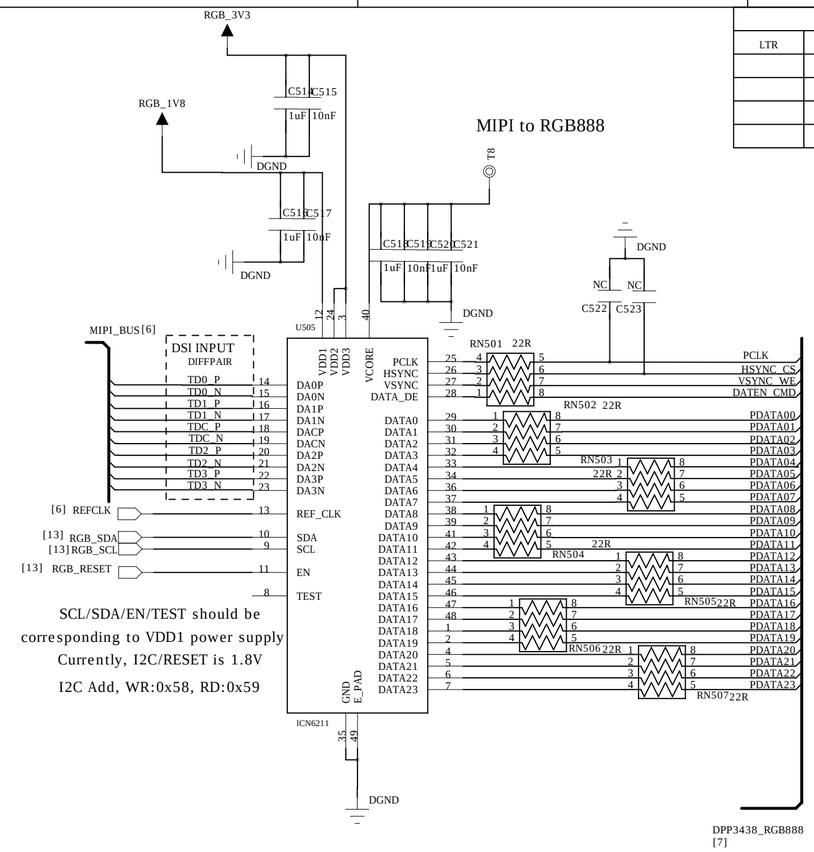

SCL/SDA/EN/TEST should be corresponding to VDD1 power supply
Currently, I2C/RESET is 1.8V
I2C Add, WR:0x58, RD:0x59

MIPI FPC Connector

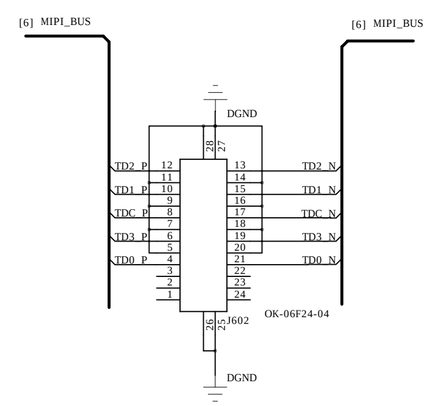

DRAWN: Zhang Tao	DATED: 2018-12-28	COMPANY: ASU Technologies			
		TITLE: Fermin2 Driver Board V0.1			
CHECKED: Boxie	DATED: 2016-10-9	CODE: <Code>	SIZE: C	DRAWING NO: Ferming2 DLPC3435+DLPA3000	REV: V0.2
QUALITY CONTROL: <QC By>	DATED: <QC Date>				
RELEASED: Tak	DATED: 2016-10-9	SCALE: <Scale>		SHEET: 6 OF 13	

REVISION RECORD			
LTR	ECO NO:	APPROVED:	DATE:

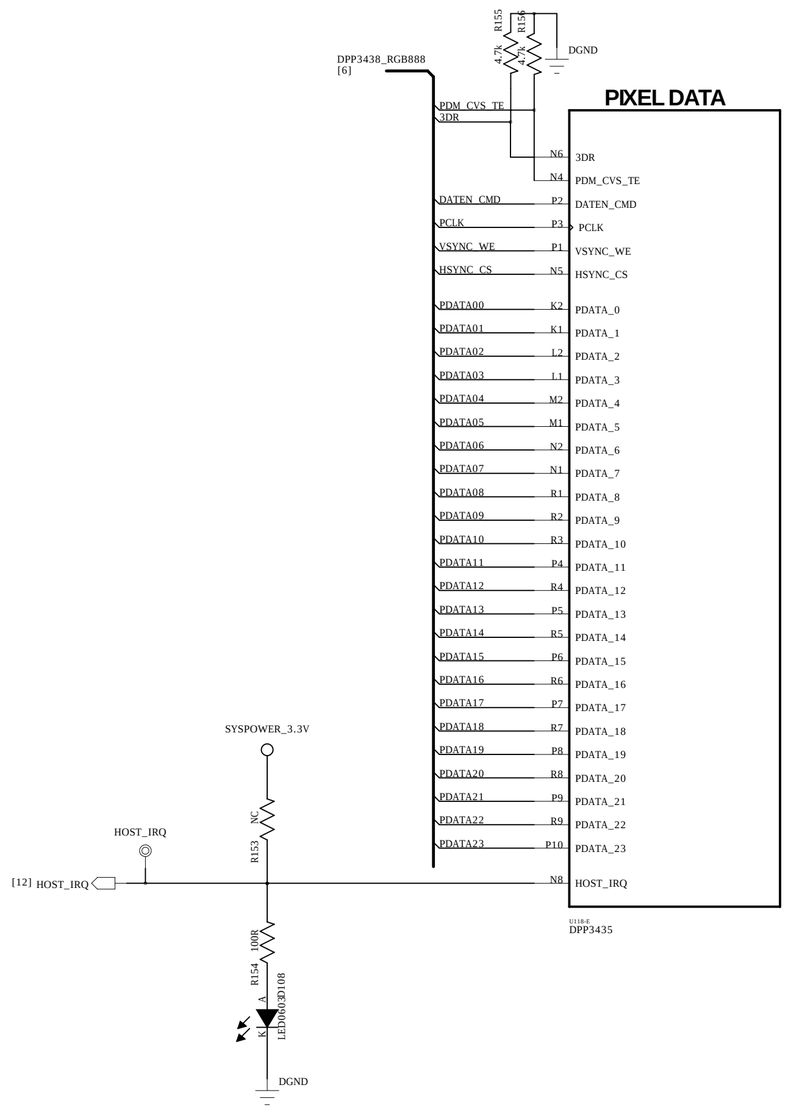

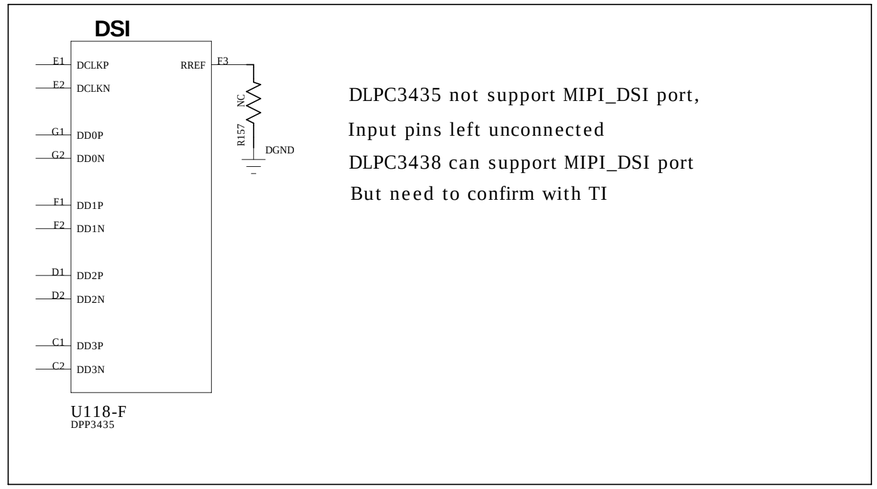

DLPC3435 not support MIPI_DSI port,
Input pins left unconnected
DLPC3438 can support MIPI_DSI port
But need to confirm with TI

COMPANY: ASU Technologies					
TITLE: Fermin2 Driver Board V0.1					
DRAWN: Zhang Tao	DATED: 2018-12-28	CODE: <Code>	SIZE: C	DRAWING NO: Ferming2 DLPC3435+DLPA3000	REV: V0.2
CHECKED: Boxie	DATED: 2016-10-9				
QUALITY CONTROL: <QC By>	DATED: <QC Date>				
RELEASED: Tak	DATED: 2016-10-9	SCALE: <Scale>		SHEET: 7 OF 13	

REVISION RECORD			
LTR	ECO NO:	APPROVED:	DATE:

DMD INTERFACE

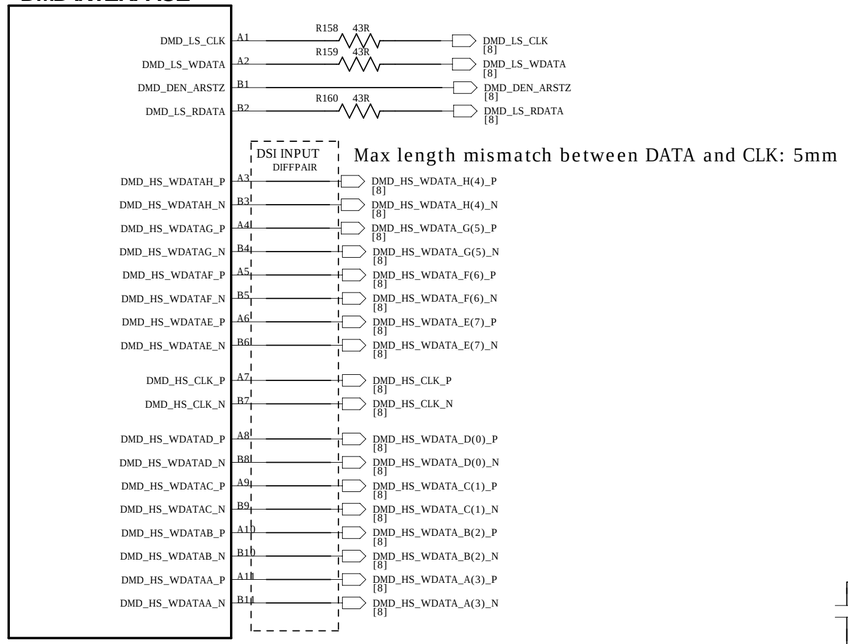

Max length mismatch between DATA and CLK: 5mm

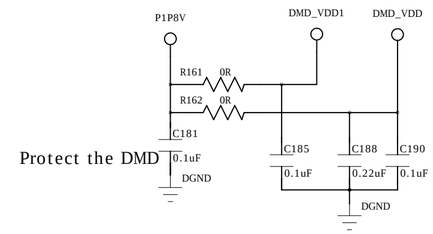

Protect the DMD

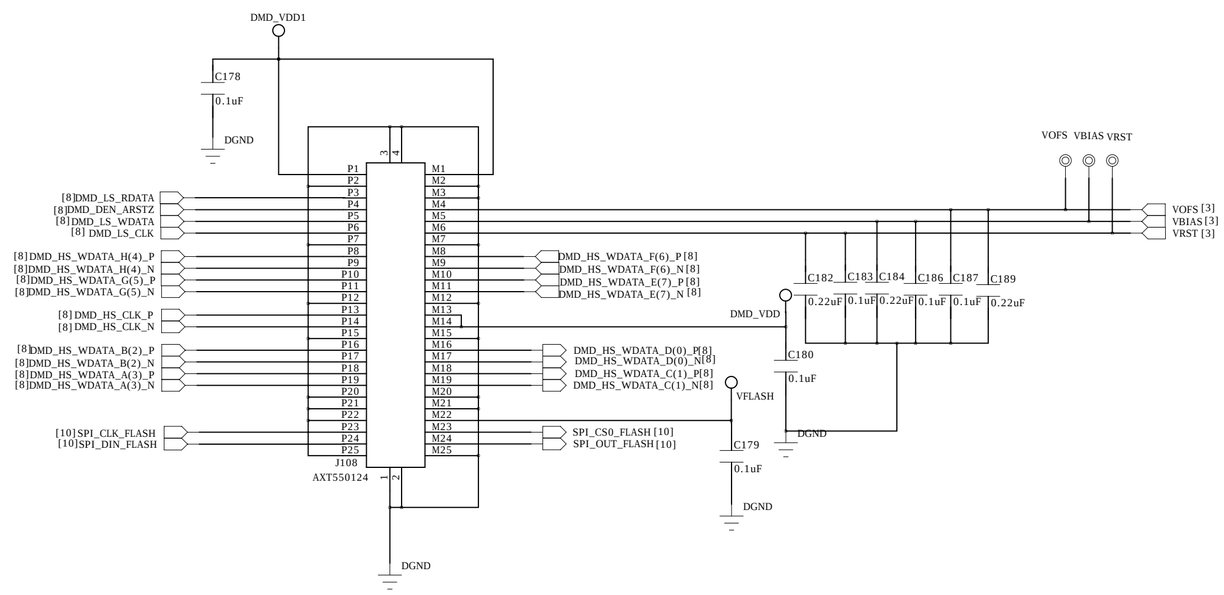

COMPANY: ASU Technologies					
TITLE: Fermin2 Driver Board V0.1					
DRAWN: Zhang Tao	DATED: 2018-12-28	CODE: <Code>	SIZE: C	DRAWING NO: Ferming2 DLPC3435+DLPA3000	REV: V0.2
CHECKED: Boxie	DATED: 2016-10-9				
QUALITY CONTROL: <QC By>	DATED: <QC Date>				
RELEASED: Tak	DATED: 2016-10-9	SCALE: <Scale>		SHEET: 8 OF 13	

REVISION RECORD			
LTR	ECO NO:	APPROVED:	DATE:

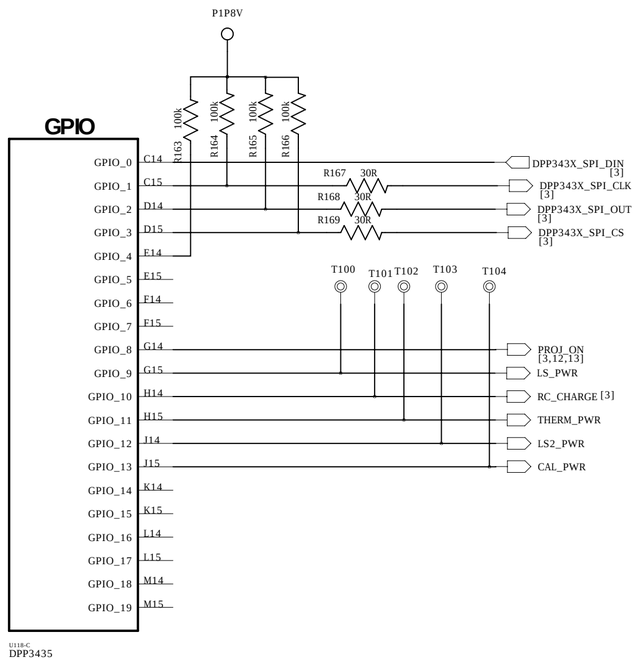

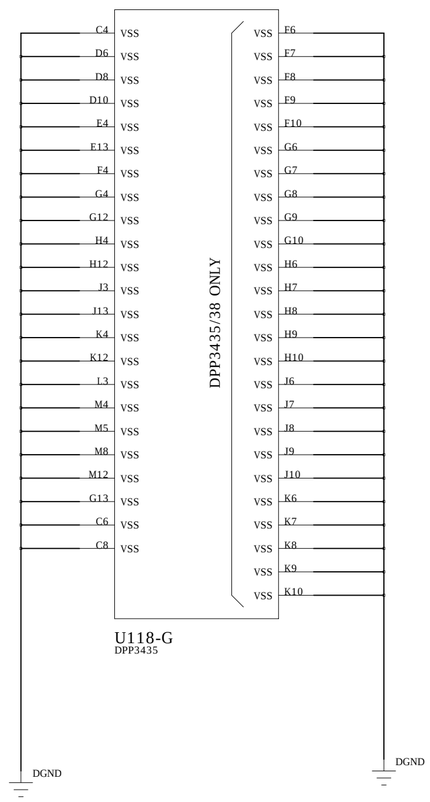

DRAWN: Zhang Tao	DATED: 2018-12-28	COMPANY: ASU Technologies	
CHECKED: Boxie	DATED: 2016-10-9	TITLE: Fermin2 Driver Board V0.1	
QUALITY CONTROL: <QC By>	DATED: <QC Date>	CODE: <Code> / SIZE: C	DRAWING NO: Ferming2 DLPC3435+DLPA3000 / REV: V0.2
RELEASED: Tak	DATED: 2016-10-9	SCALE: <Scale>	SHEET: 9 OF 13

REVISION RECORD			
LTR	ECO NO:	APPROVED:	DATE:

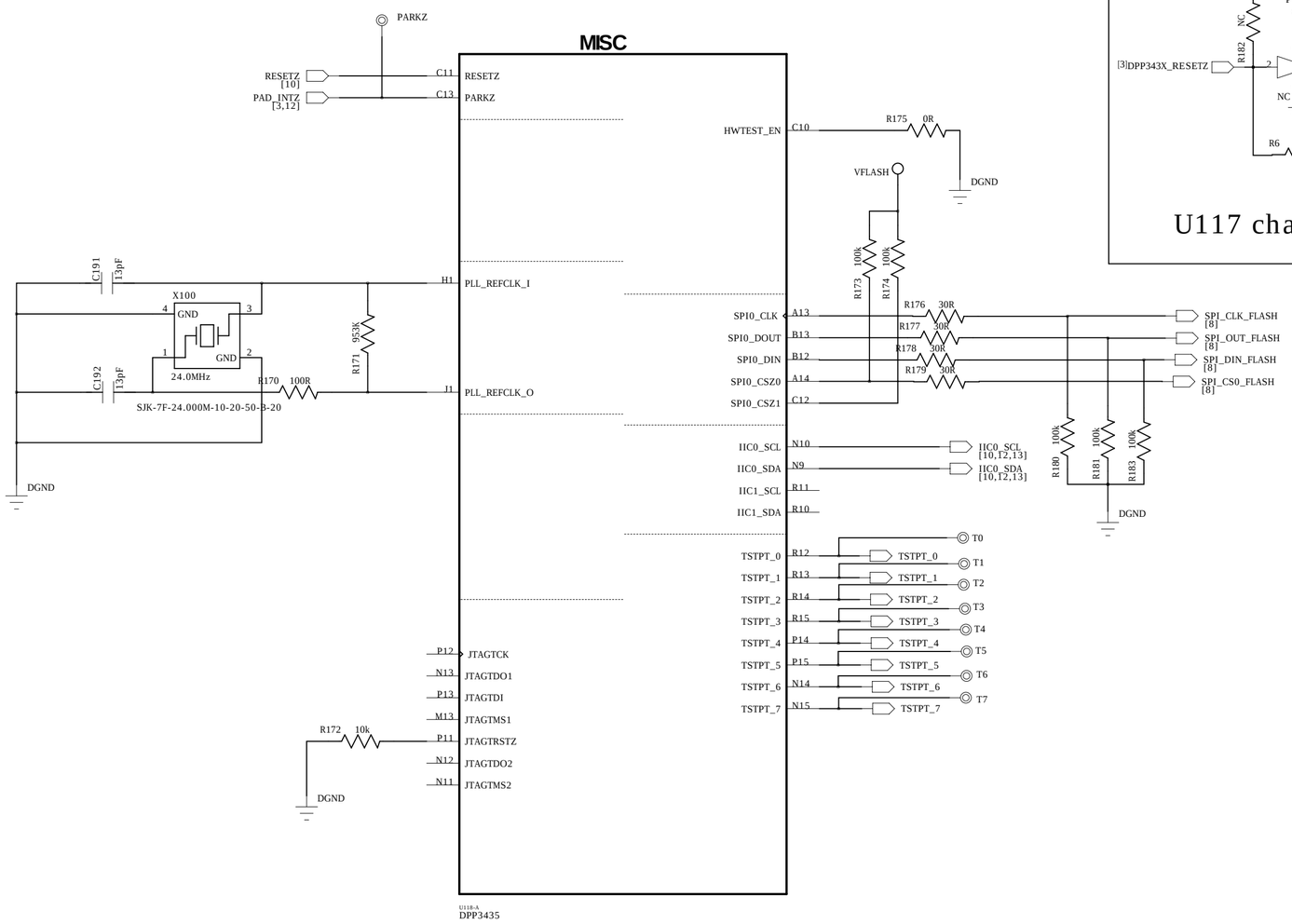

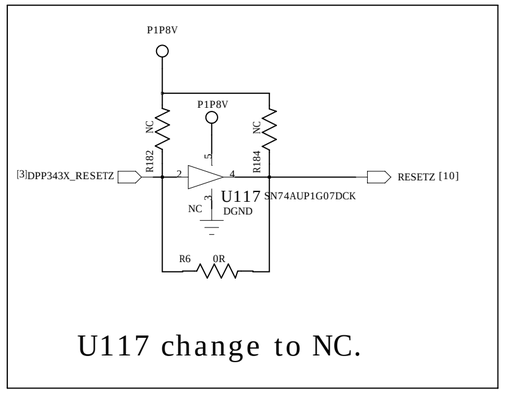

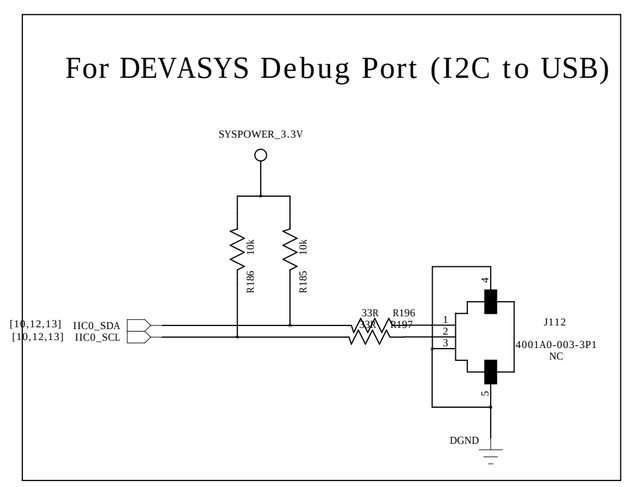

COMPANY: ASU Technologies			
TITLE: Fermin2 Driver Board V0.1			
DRAWN: Zhang Tao	DATED: 2018-12-28		
CHECKED: Boxie	DATED: 2016-10-9		
QUALITY CONTROL: <QC By>	DATED: <QC Date>		
RELEASED: Tak	DATED: 2016-10-9		
CODE: <Code>	SIZE: C	DRAWING NO: Ferming2 DLPC3435+DLPA3000	REV: V0.2
SCALE: <Scale>		SHEET: 10 OF 13	

REVISION RECORD			
LTR	ECO NO:	APPROVED:	DATE:

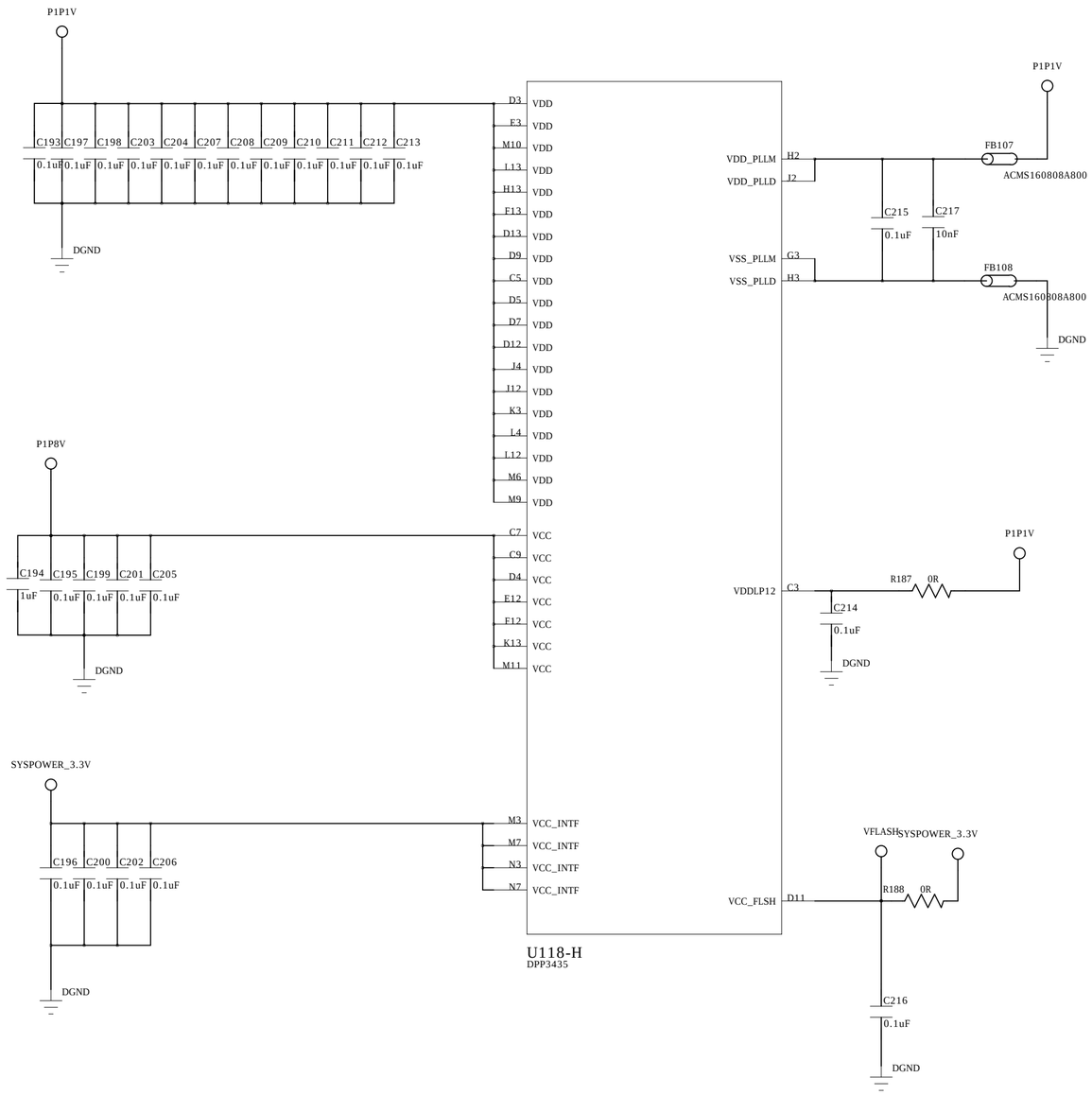

DRAWN: Zhang Tao	DATED: 2018-12-28	COMPANY: ASU Technologies	
CHECKED: Boxie	DATED: 2016-10-9	TITLE: Fermin2 Driver Board V0.1	
QUALITY CONTROL: <QC By>	DATED: <QC Date>	CODE: <Code>	SIZE: C
RELEASED: Tak	DATED: 2016-10-9	DRAWING NO: Ferming2 DLPC3435+DLPA3000	REV: V0.2
		SCALE: <Scale>	SHEET: 1 of 13

REVISION RECORD			
LTR	ECO NO:	APPROVED:	DATE:

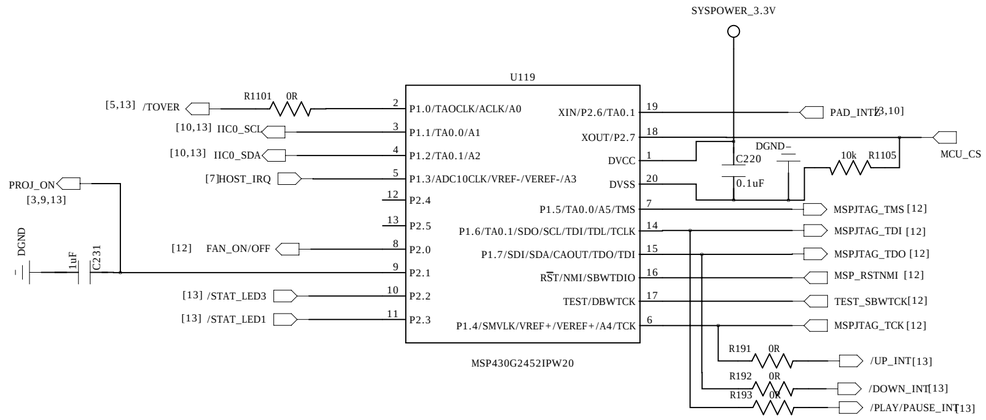

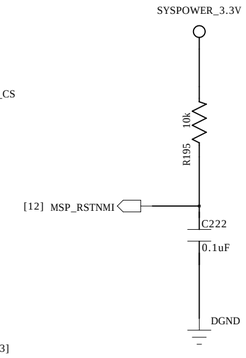

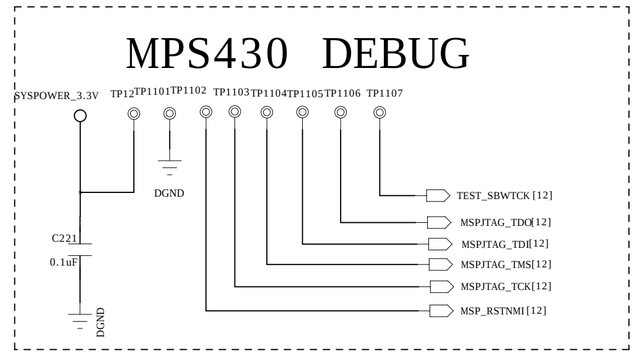

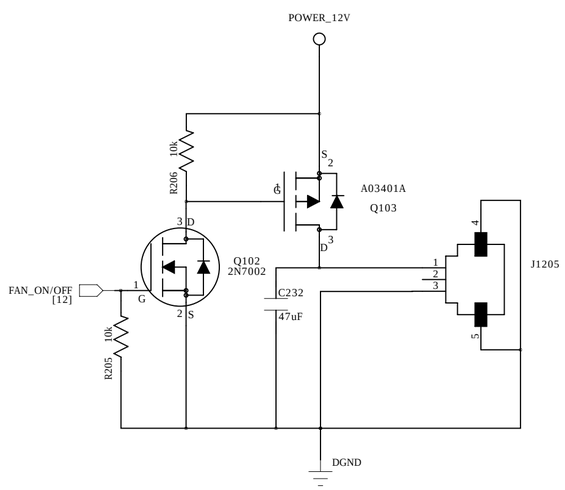

COMPANY: ASU Technologies			
TITLE: Fermin2 Driver Board V0.1			
DRAWN: Zhang Tao	DATED: 2018-12-28		
CHECKED: Boxie	DATED: 2016-10-9	CODE: <Code>	SIZE: C
QUALITY CONTROL: <QC By>	DATED: <QC Date>	DRAWING NO: Ferming2 DLPC3435+DLPA3000	REV: V0.2
RELEASED: Tak	DATED: 2016-10-9	SCALE: <Scale>	SHEET: 12 OF 13

REVISION RECORD			
LTR	ECO NO:	APPROVED:	DATE:

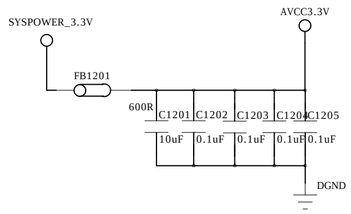

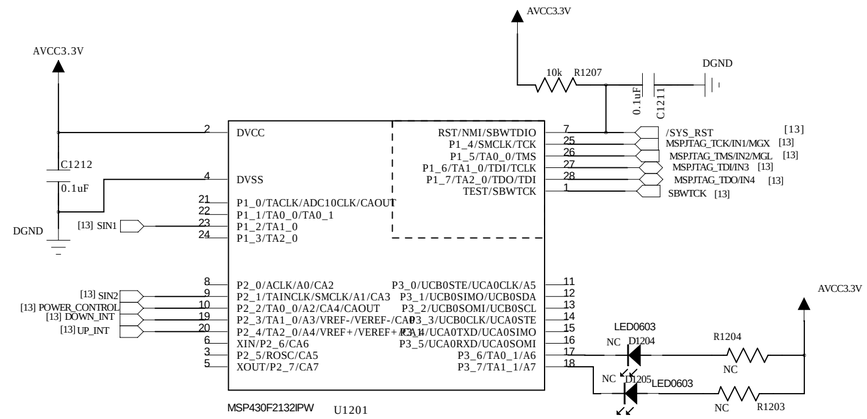

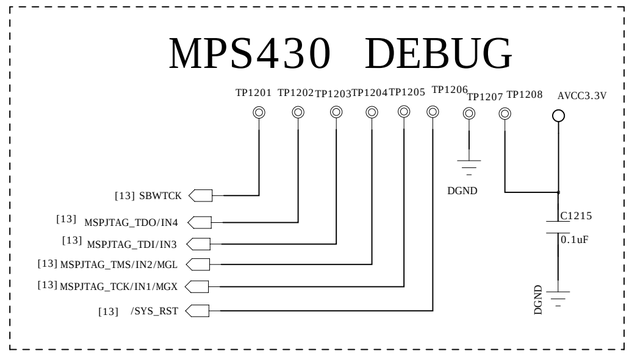

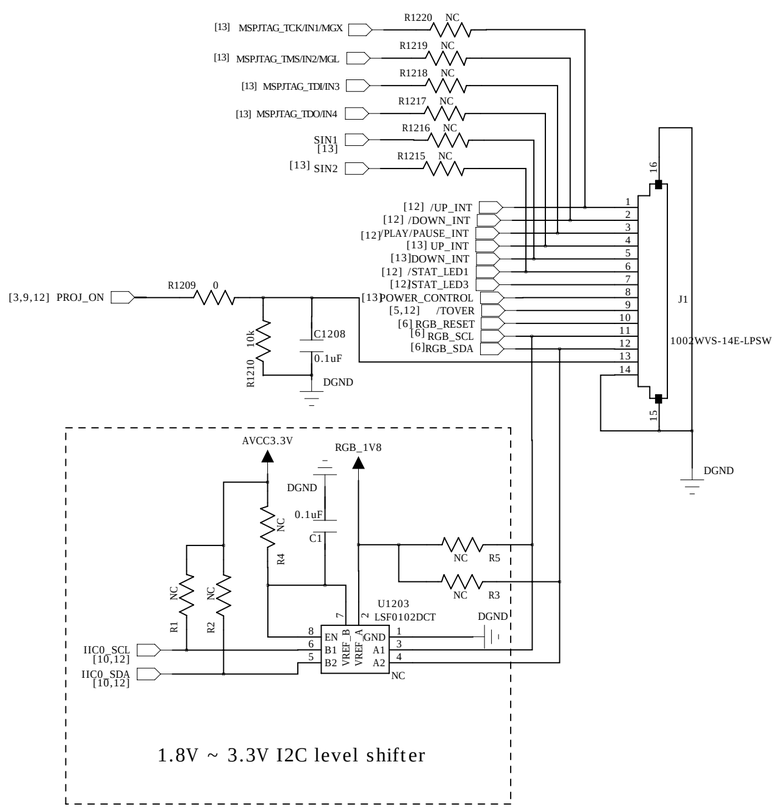

Moto Driver&Connector

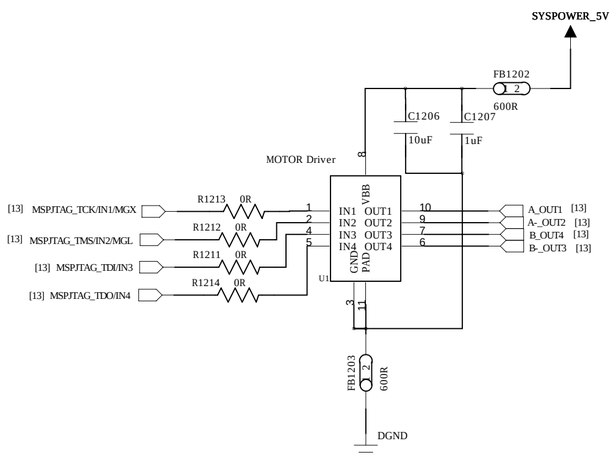

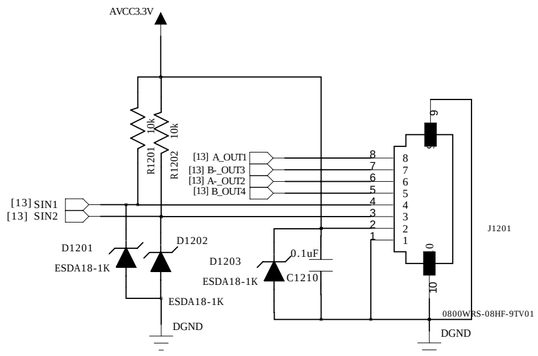

COMPANY: ASU Technologies					
TITLE: Fermin2 Driver Board V0.1					
DRAWN: Zhang Tao	DATED: 2018-12-28	CODE: <Code>	SIZE: C	DRAWING NO: Ferming2 DLPC3435+DLPA3000	REV: V0.2
CHECKED: Boxie	DATED: 2016-10-9				
QUALITY CONTROL: <QC By>	DATED: <QC Date>				
RELEASED: Tak	DATED: 2016-10-9	SCALE: <Scale>		SHEET: 13 OF 13	