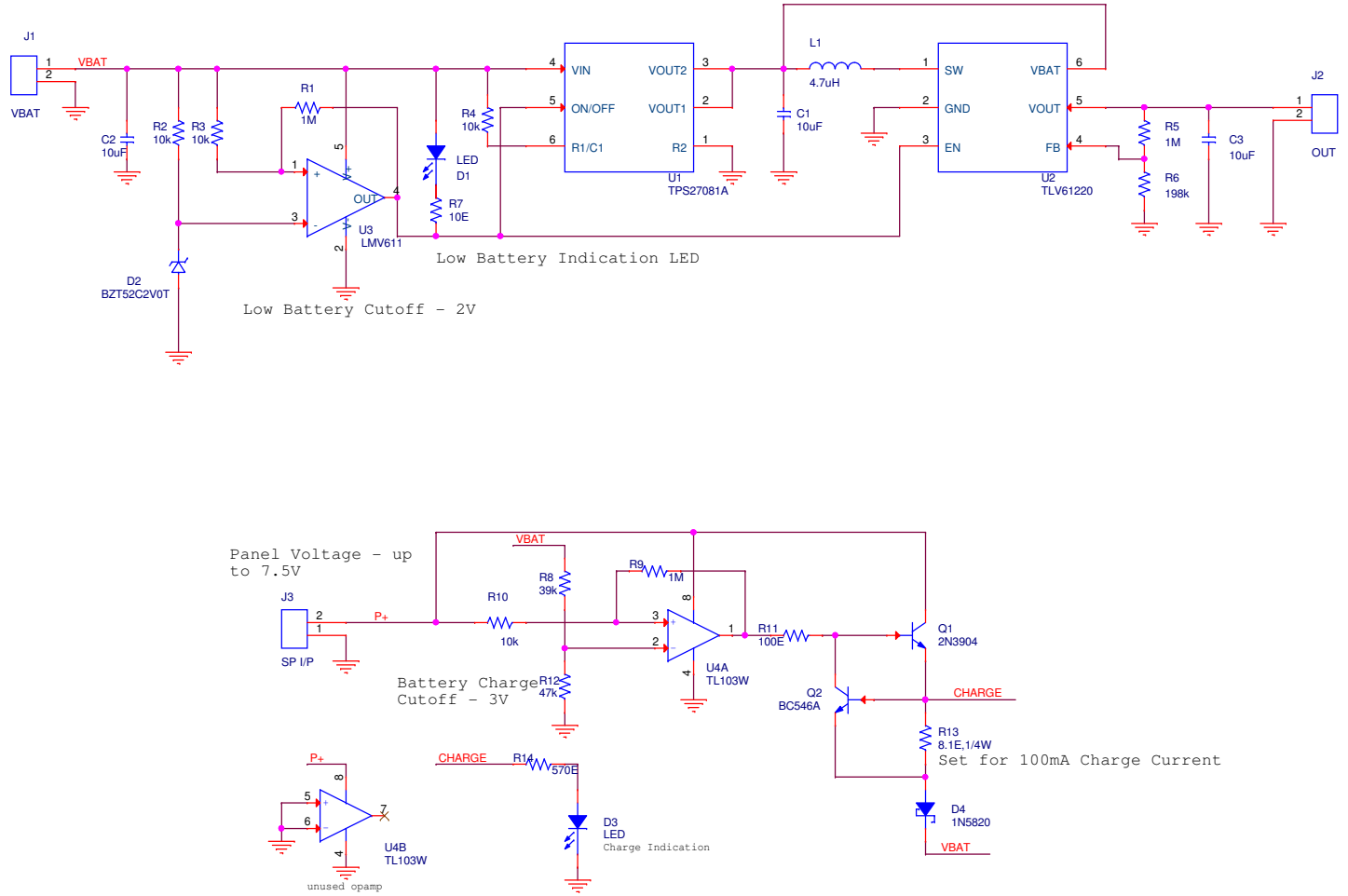

Title	LED Study Light	
Size B	Document Number 1.0	Rev 1.0
Date: Tuesday, April 23, 2013	Sheet 1 of 2	