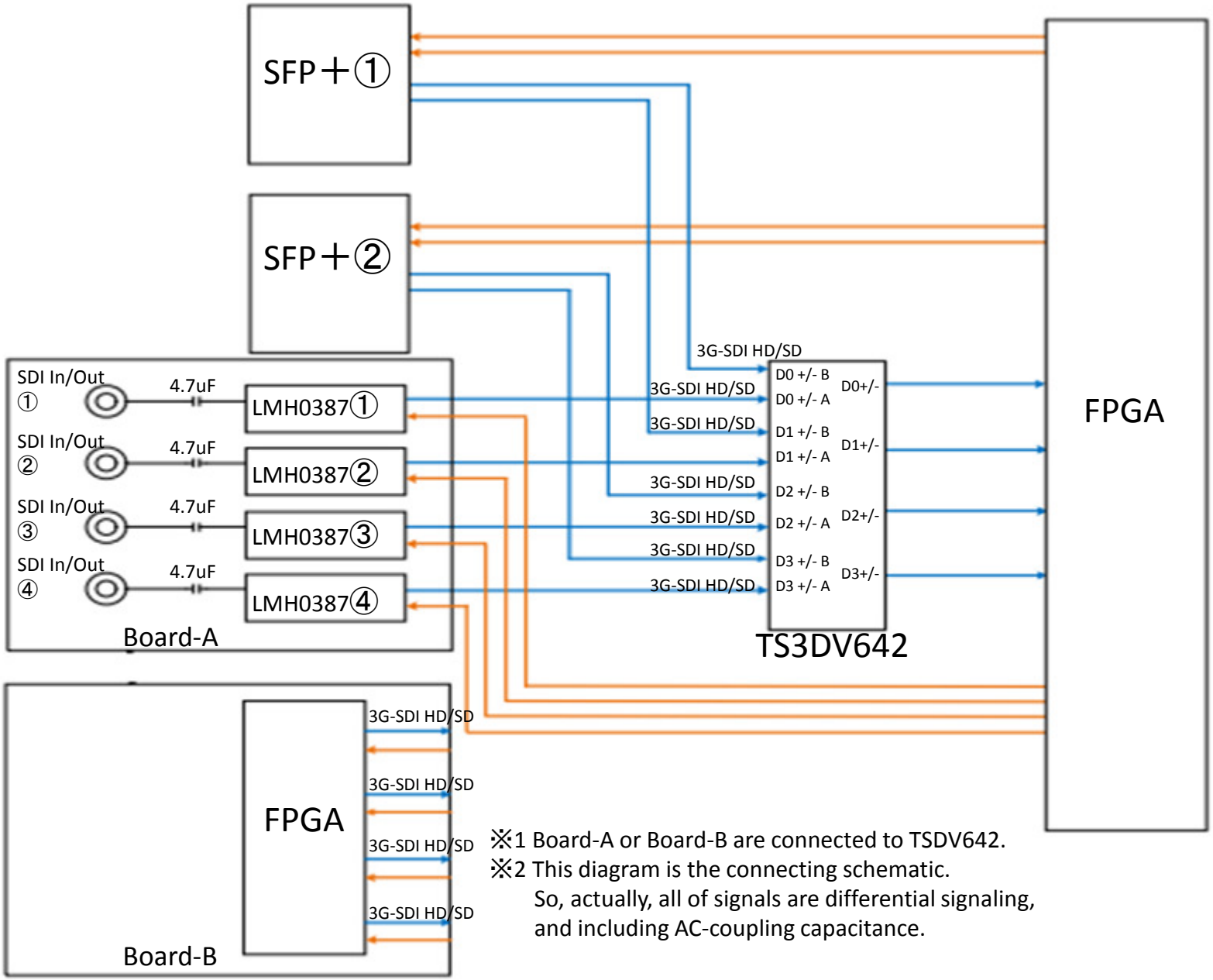

※1 Board-A or Board-B are connected to TSDV642.
※2 This diagram is the connecting schematic.
So, actually, all of signals are differential signaling,
and including AC-coupling capacitance.