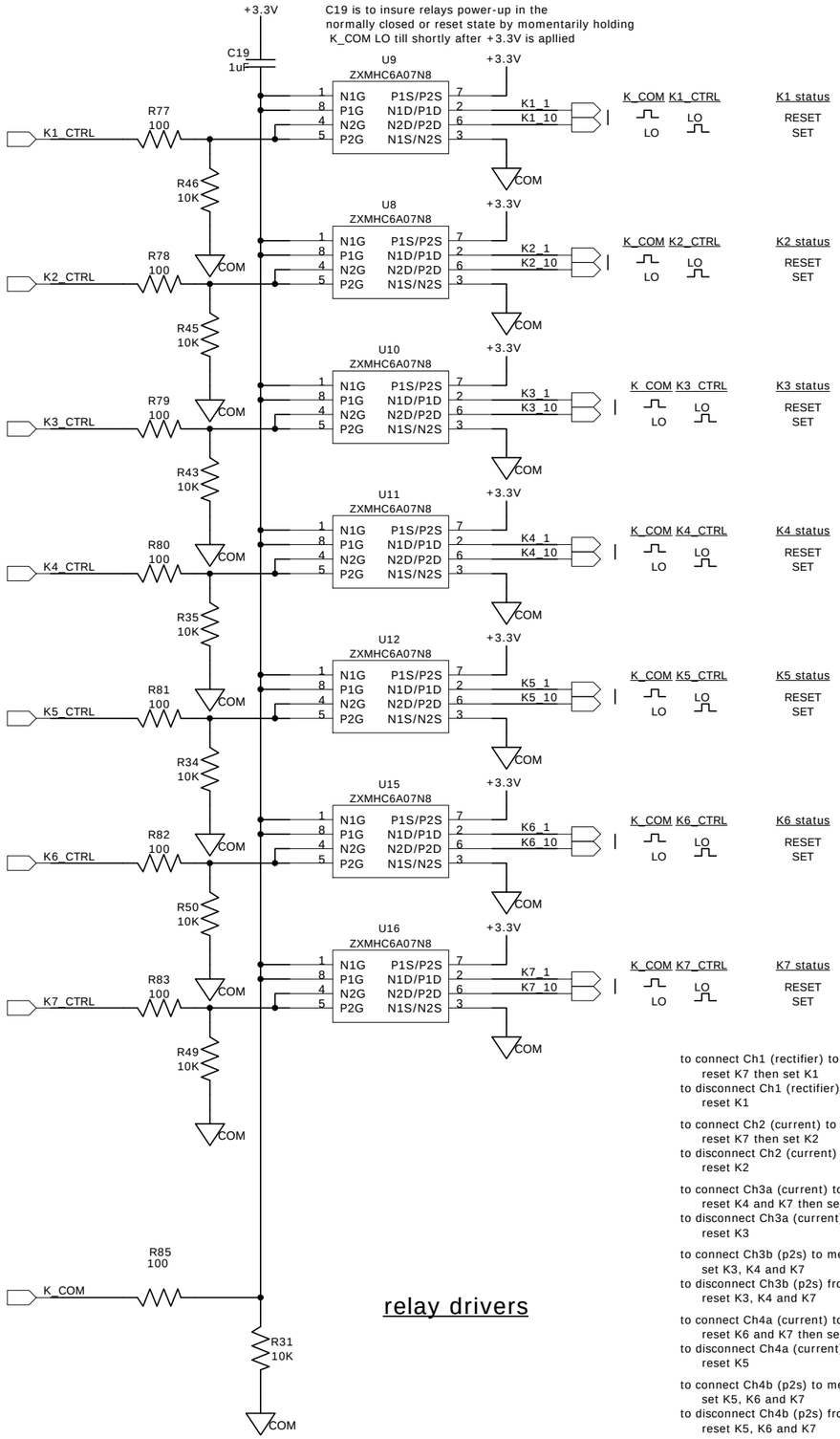

relay drivers

to connect Ch1 (rectifier) to measurement system
reset K7 then set K1
to disconnect Ch1 (rectifier) from measurement system
reset K1

to connect Ch2 (current) to measurement system
reset K7 then set K2
to disconnect Ch2 (current) from measurement system
reset K2

to connect Ch3a (current) to measurement system
reset K4 and K7 then set K3
to disconnect Ch3a (current) from measurement system
reset K3

to connect Ch3b (p2s) to measurement system
set K3, K4 and K7
to disconnect Ch3b (p2s) from measurement system
reset K3, K4 and K7

to connect Ch4a (current) to measurement system
reset K6 and K7 then set K5
to disconnect Ch4a (current) from measurement system
reset K5

to connect Ch4b (p2s) to measurement system
set K5, K6 and K7
to disconnect Ch4b (p2s) from measurement system
reset K5, K6 and K7

local relay spec.'s
128 ?-10% ohms
4ms min pulse
2.25V threshold
26mA

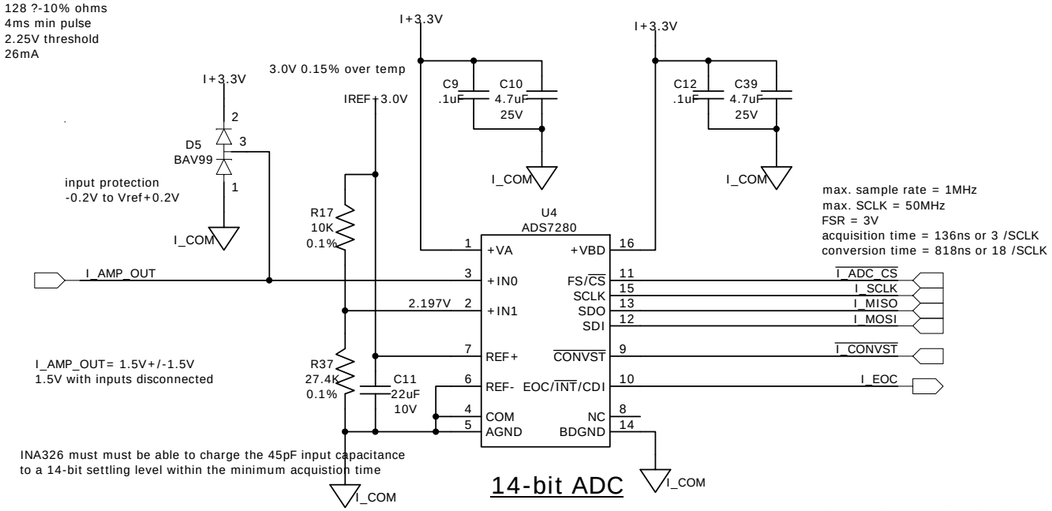

max. sample rate = 1MHz
max. SCLK = 50MHz
FSR = 3V
acquisition time = 136ns or 3 /SCLK
conversion time = 818ns or 18 /SCLK

I_AMP_OUT= 1.5V+/-1.5V
1.5V with inputs disconnected

INA326 must must be able to charge the 45pF input capacitance
to a 14-bit settling level within the minimum acquistion time

14-bit ADC

sources of AC errors in ADS7280
SNR =
THD =
ENOB = 14 bits

sources of ADC errors assuming FSR = 3V
max. offset error = V(adc)os ± 0.8mV
offset error drift = V(adc)osd ± 0.1ppm/C = ±12.5uV (assuming 125 temp swing)
max. gain error = G(adc)err = 0.25% of FSR = ±025% x 3V = ±7.5mV
gain error drift = G(adc)errd ±0.5ppm/C = ±62.5uV (assuming 125 temp swing)
max. diff. linearity error = DNL(adc)err ± 1 lsb = ±183uV
max. intergral linearity error = INL(adc) = ±1 lsb = ±183uV
quantization error = Q(adc)err = 1/2 lsb = ±91.5uV

ADC accuracy, no calibration
= V(adc)os + (V(adc)osd + G(adc)err + G(adc)errd + DNL(adc)err + INL(adc)err + Q(adc)err)
= ±0.8mV ±12.5uV ±7.5mV ±62.5uV ±183uV ±183uV ±91.5uV = ±8.8325mV

ADC accuracy, offset and gain error nulled (assuming 0ppm/°C resistor tempco)
= (V(adc)osd + G(adc)errd + DNL(adc)err + INL(adc)err + Q(adc)err)
= ±12.5uV ±62.5uV ±183uV ±183uV ±91.5uV = ±0.5325mV

Scaling Gains
G(rect) = 0.0002±0.5%
G(cur) = 0.4±0.5%
G(p2s) = 0.00475±0.5%

U14 Gain & Offset
G(U14)=2(R39//R40)/(R42//R41)=30±0.36%
Vos(U14) = Vos(U14)(IN) x G(U14) + Vos(U14)
Vos(U14) = (±124uV) x (30±0.36%) + (1.5±0.1%) = ~ 1.5±6mV

Total Gain & Offset
Gt(rect) + Vos(U14) = G(rect) x G(U14) + Vos(U14) = 0.006±0.86%+1.5±6mV
Gt(cur) + Vos(U14) = G(cur) x G(U14) +Vos(U14) = 12±0.86%+1.5±6mV
Gt(p2s) + Vos(U14) = G(p2s) x G(U14) + Vos(U14) = 0.1425±0.86%+1.5±6mV

Summary

channel 1 (rect)
input range = V(in)(adc)(rng)/Gt(rect) = 3V/0.006 = 500Vdc or ±250Vdc
ADC resolution wrt to input = 500V/2^14 = 30.5mV/bit
uncalibrated accuracy wrt to input = ±0.86% of reading* ±14.8325mV ?

channel 2, 3A and 4A (cur)
input range = V(in)(adc)(rng)/Gt(cur) = 3V/12 = 250mVdc or ±125mVdc
ADC resolution wrt to input = 250mV/2^14 = 15.26uV/bit

channel 3B and 4B (p2s)
input range = V(in)(adc)(rng)/Gt(p2s) = 3V/0.1425 = 21.1Vdc or ±10.5Vdc
ADC resolution wrt to input = 21.1V/2^14=1.28mV/bit

*
for rectifier channel
reading = (ADC(reading)x183uV) - 1.5V)/0.006
for current channel
reading = (ADC(reading)x183uV - 1.5)/12
for p2s channel
reading = (ADC(reading)x183uV - 1.5)/0.1425

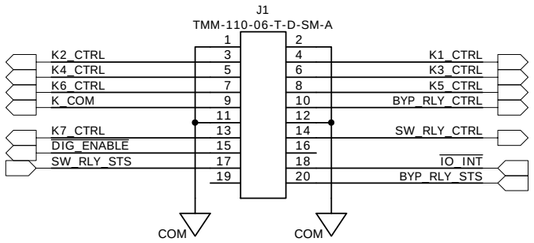

host I/O interface

TITLE: Scout Analog Board Schematic

Elecsys Corporation Proprietary.
USE OF THIS DOCUMENT & INFORMATION IS ONLY GRANTED UNDER CONSIDERATION OF OR USE UNDER CONTRACTUAL AGREEMENT. THIS DOCUMENT MUST BE RETURNED OR DESTROYED AT NTG REQUEST

DRAWING NO:	REV:
84-0034-00	AW

SIZE:	SHEET	OF
B	4	4