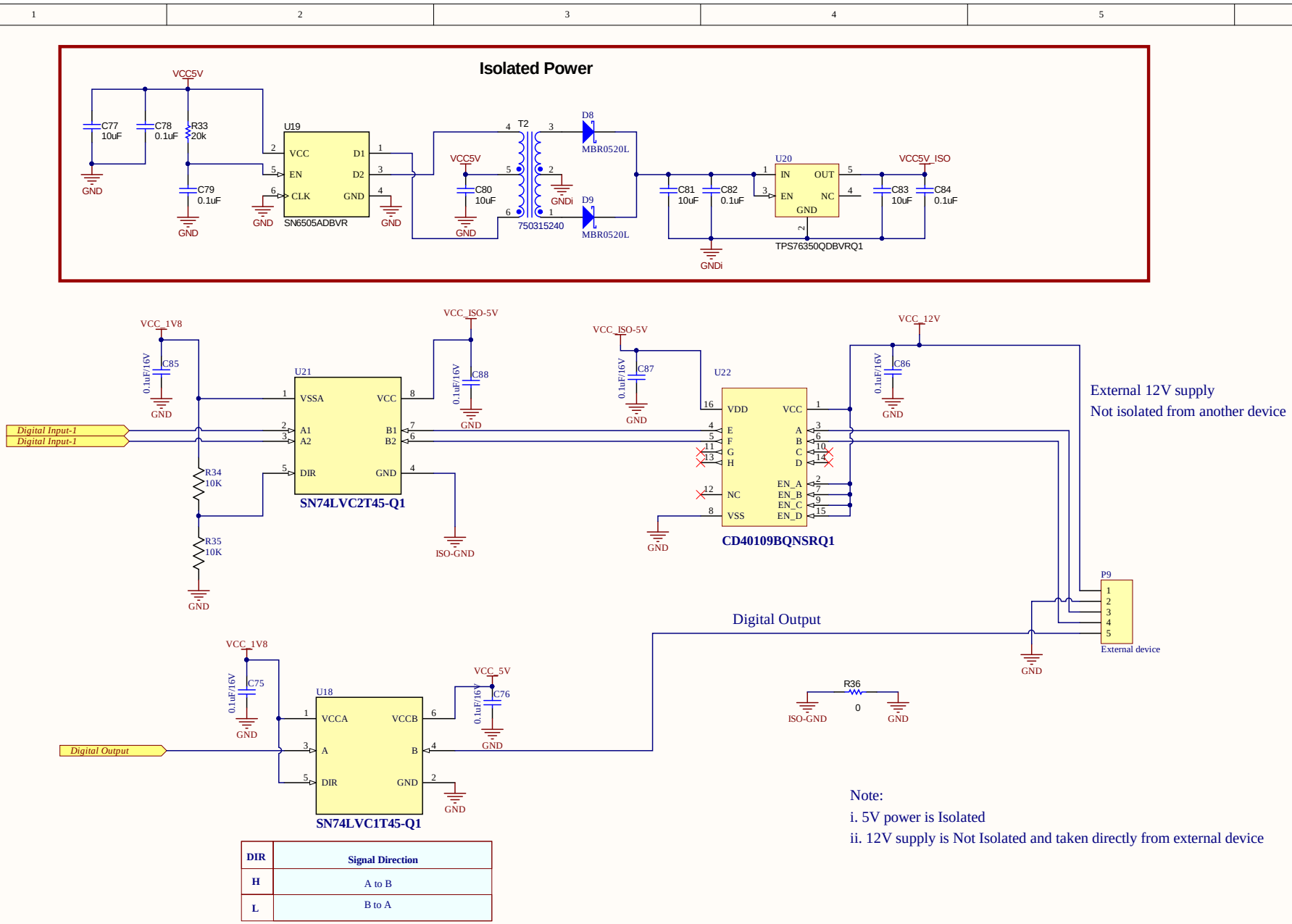

DIR	Signal Direction
H	A to B
L	B to A

Note:

i. 5V power is Isolated

ii. 12V supply is Not Isolated and taken directly from external device

Title	Konnect-LTE-CAN Interface		Crevavi Technologies Pvt Ltd A V Complex (2nd floor) Ring Road Hebbal Industrial Area India - 570016
Size: A4	Number:	Revision:	
Date: 12-10-2019	Time: 13:08:08	Sheet of	
File: E:\Projects\Crevavi\CRE0053-Konnect-LTE\CRE0053-Konnect-LTE_1V0\Altium\GPIO's.SchDoc			

Copyright Crevavi 2014-2015. Not to be Distributed outside Crevavi without duly authorized permission.

Comment	Description	Designator	Footprint	LibRef	Quantity
8560C-13-F	Imported	L	SMC	8560C-13-F	1
10pF/16V	CAP,GBR 6.3UF 6.3V X5R 0402	C1, C5	0402	GRM155R60J475ME87D	2
22pF/6.3V	CAP,GBR 4.7UF 6.3V X5R 0402	C2, C6	0402	GRM155R60J475ME87D	2
0.1uF/10V	CAP,GBR 4.7UF 6.3V X5R 0402	C3, C7, C18, C47, C48	0402	GRM155R60J475ME87D	5
100uF/10V	Polarized Capacitor (Axial)	C4, C8	EC-A	Cap Pol2	2
NM	Capacitor	C9, C10, C15, C16	0603	Cap	4
100uF/6.3V	Capacitor SMD Tantalum 47uF 20% 6.3V 1210	C11	CAPMP3528X210N	CAPT_47u_1210_6V3	1
0.1uF/16V	Capacitor	C12, C13, C14, C17, C19, C22, C23, C24, C25, C26, C36, C43, C44, C45, C46, C65, C66, C67, C68, C75, C75, C76, C76, C85, C86, C87, C88	1608[0603]	Cap	27
12pF/50V	Capacitor/NPO, ±2%	C20, C21	Passive 0603	CAPACITOR	2
22pF/50V	CAP,GBR 4.7UF 6.3V X5R 0402	C27, C28	0402	GRM155R60J475ME87D	2
C0612X7R2A104K12	Imported	C29	0805	C0612X7R2A104K12	1
GRM1555C1H331JA0	Imported	C30	0402	GRM1555C1H331JA0	1
C5750X7R2A475M223	Imported	C31	2220_2B0	C5750X7R2A475M223	1
205VP56MX	Imported	C32, C33	CAP3MT_62_0E1	205VP56MX	2
GRM155R71C822KA0	Imported	C34	0402	GRM155R71C822KA0	1
1uF/6.3V	Capacitor	C36, C37	1608[0603]	Cap	2
470uF/10V	Imported	C38, C39	CAP_EEK_F	205VP56MX	2
33pF/50V	Capacitor	C40, C41, C42	6-0805_M	Cap	3
100nF/50V	Capacitor	C49	1608[0603]	Cap	1
C1608X7S0J106M080AC	CAP,GBR 10µF, 6.3 V, ±20%, X7S, 0603	C50, C52, C54, C57, C58, C64	0603	C1608X7S0J106M080AC	6
CL05B104KP5NNNC	CAP,GBR 0.1 µF, 10 V, ±10%, X7R, 0402	C51, C53, C55	0402	CL05B104KP5NNNC	3
C0603C508C5GACTU	CAP, CBRM, 0.5 pF, 50 V, ±0.25%, C0G/NP0, 0603	C56, C59, C62	0603	C0603C508C5GACTU	3
GRM1555C1HR40BA01D	CAP, CBRM, 0.4 pF, 50 V, ±0.1%, C0G/NP0, 0402	C60, C63	0402	GRM1555C1HR40BA01D	2
CGA3E2X7R2A472K080A	CAP, CBRM, 4700 pF, 100 V, +/- 10%, X7R, AEC-Q200 Grade 1, 0603	C61	0603	CGA3E2X7R2A472K080A	1
10uF/50V	Capacitor	C65, C70	1608[0603]	Cap	2
1uF/50V	Capacitor	C71, C74	1608[0603]	Cap	2
0.1uF/25V	Capacitor	C72, C73	1608[0603]	Cap	2
GRT188C81A106ME13D	CAP, CBRM, 10 µF, 10 V, ±20%, X6S, AEC-Q200 Grade 1, 0603	C77, C80, C81, C83	06035	CMP-0007500-1	4
GCM155R71A104KA55D	CAP, CBRM, 0.1 µF, 10 V, ±10%, X7R, AEC-Q200 Grade 1, 0402	C78, C79, C82, C84	04025	CMP-0006350-1	4
ZM4733A	No Description Available	CR1	DIODE_MELF_ZMY	ZM4733A	1
ESD3212DPYR		D1, D2, D3	ESD3212DPYR	ESD3212DPYR	3
ESDCAN05-2BWY		D4	SOT-323	ESDCAN05-2BWY	1
ESDA6V1-5W6	6 V 50 pF SMT Uni-Directional TransilÃ™ Array SOT-323-6	D5	SOT323-5L	ESDA6V1-5W6	1
MBR0520LT1G	DIODE, SCHOTTKY, 20 V, 500 A, SOD-123	D6, D7	SOD-123	MBR0520LT1G	2
MBR0520L	SCHOTTKY DIODE, 20V, 500mA, 2-pin SOD-123, RoHS, Tape and Reel	D8, D9	DNSC-SOD-123-2-425-04_V	CMP-2000-04926-1	2
RF Connector	Header, 5-Pin	GNSS ANT1, MAIN ANT1	SMA_RF_Connector	Header 5	2
78727-0001	1.40mm Height Push-Pull micro-SIM Card Socket w/ Detect Switch, Surface Mount, 8 Circuits, Halogen Free, Lead-Free	J2	78727-0001_1	78727-0001	1
1727010	2-pin Term Block, 2PCS, 3.81mm, TH	J1, J4	PhoenixContact_1727010	1727010	2
Jumper	Jumper Wire	J5, J6, J7, J8, J9, J10	0402-0.2	Jumper	6
47nH	SMD Chip Inductor - Ferrite Beads WE-CBF_Z-80 Ohm	L1	0402	WE-CBF 0603_74279267	1
SRU1048-4R7Y	Imported	L2	SRU1048	SRU1048-4R7Y	1
ACT45B-101-2P-TL003	Inductor/Ferrite 100µH, 0.15 A, 2 ohm, SMD	L3	ACT45B	ACT45B-101-2P-TL003	1
LED	Green	LED1, LED2, LED3, LED4	LEDC2012X9GN	LED	4
Header 4	Header, 4-Pin	P1, P3, P5, P8	HDR1X4	Header 4	4
	Header, 4-Pin	P2	CONNHDR SMD 2.54mm 4pin	Header 4	1
Header 3	Header, 3-Pin	P4, P6, P7	HDR1X3	Header 3	3
External device	Header, 5-Pin	P9	HDR1X5	Header 5	1
3mm Tact Switch		PRG1, RST1	Tact Switch 3.3mm Pitch	Switch	2
DTC143ZETL	MMBT 3904	Q1, Q2	MMBT3904	MMBT3904	2
0E	Resistor	R1, R26, R27, R28	0402	Res3	4
10E	Resistor	R2	0402	Res3	1
120E	No Description Available	R3, R29	RC0603N	ERJ-3GEY103V	2
10k	No Description Available	R4, R6, R11, R12, R13, R21, R24, R35	RC0603N	ERJ-3GEY103V	8
300E	No Description Available	R5, R7	RC0603N	ERJ-3GEY103V	2
680E		R8	Passive 0603	Resistor	1
4.7K		R9	Passive 0603	Resistor	1
4.7K		R10	0603	Resistor	1
RC0603FR-0768KL	Imported	R15	0603	RC0603FR-0768KL	1
CRCW04022961FKED	Imported	R16	0402	CRCW04022961FKED	1
RC0603FR-0712KL	Imported	R17	0603	RC0603FR-0712KL	1
22K	Resistor	R18	0805	Res1	1
680E	Resistor	R19	0-0603	Res3	1
51K	Resistor	R20, R21	0402	Res3	2
10K	Resistor	R22	0805	Res1	1
15K	Resistor	R23	0402	Res3	1
CRCW04021K0FKED	RES, 1.0 k, 1%, 0.063 W, 0402	R24	0402	CRCW04021K0FKED	1
CRCW04020000Z0ED	RES, 0, 5%, 0.063 W, 0402	R25, R32	0402	CRCW04020000Z0ED	2
ERJ-8ENF60R4V	RES, 60.4, 1%, 0.25 W, 1206	R30, R31	1206	ERJ-8ENF60R4V	2
ERJ-2GE1203X	RES, 20 k, 5%, 0.1 W, AEC-Q200 Grade 0, 0402	R33	04025	CMP-0026998-1	1
CRCW04020000Z0ED	RES, 0, 5%, 0.063 W, AEC-Q200 Grade 0, 0402	R36	04025	CMP-0026922-3	1
1825910-6	CONNECTOR, TACT SWITCH, HIGH TEMP	SW1, SW2, SW3	SWX_1825910-6	1825910-6	3
760390015	Transformer, 475 uH, SMT	T1	Würth_760390015	760390015	1
750315240	Transformer, 110 uH, SMT	T2	Würth_750315240	CMP-0030614-1	1
BG96MA-128-SGN	LTE Cat.M1 Module for Global Sku	U1	LTE_MODULE_BG96	BG96	1
TPD3E001DRLR	No Description Available	U2	DRLS	TPD3E001DRLR	1
BL652 Module	BZL652 Module	U3	TXCVR_BL652-SA-01-T/R	BL652_Module	1
MCP2515T-I/SO	No Description Available	U4	SOIC18-W_MC	MCP2515T-I/SO	1
ISO1042BQDWRQ1	No Description Available	U5, U14	SW16	ISO1042BQDWRQ1	2
SN74AXC4T774PWR		U6	TSSOP-16	SN74AXC4T774PWR-SPG Translator	1
LMR14030SDDAR	Imported	U7	DDA0008F_N	LMR14030SDDAR	1
MIC23302AWU-TR	Voltage Regulator IC, TO-263-5 SMD, LM2591HVS-5.0	U8	TO-263-5	REGULATOR LM2591HVS-5.0	1
TLV757123PDBVR		U9	SOT-23-5	TLV757123PDBVR	1
SN74AXC4T245PWR		U10	TSSOP-16	SN74AXC4T245	1
ISO1410DWR	INTERFACE TX/RX/TXRX CAN	U11	SOIC127P1030X265-16N	ISO1410DWR	1
TPS76350QDBVRQ1	No Description Available	U12	DBV5	TPS76350QDBVRQ1	1
SN6501QDBVRQ1	No Description Available	U13	DBV5	SN6501QDBVRQ1	1
SN74LVC1T45-Q1	No Description Available	U15, U17, U18, U18	SC70-6	SN74LVC1T45-Q1	4
ISO7742FQDBQQ1	No Description Available	U16	DBQ0016A_N	ISO7742FQDBQQ1	1
SN6505ADBVR	Low-Noise 1-A Transformer Driver for Isolated Power Supplies, Internal Clock, 180kHz, DBV0006A (SOT-23-6)	U19	DBV0006A_L	CMP-0076094-1	1
TPS76350QDBVRQ1	Single Output Automotive LDO, 150 mA, Fixed 5 V Output, 2.7 to 10 V Input, pin SOT-23 (DBV), -40 to 125 degC, Green (RoHS & no Sb/Br)	U20	DBV0005A_N	CMP-0035574-1	1
SN74LVC2T45-Q1	No Description Available	U21	VSSOP	SN74LVC2T45-Q1	1
CD40109BQNSRQ1	Automotive catalog CMOS Quad Low-to-High Voltage Level Shifter, 20V Rating, 16-SO -40 to 125	U22	SO16	CD40109BQNSRQ1	1
32.768kHz	XTAL SMD 3215, 32.768kHz 9pF, ±20ppm	X1	XTAL_3215		1
ABM3B-20.000MHZ	No Description Available	Y1	CRYSTAL_ABM3B	ABM3B-20.000MHZ-B2-T	1