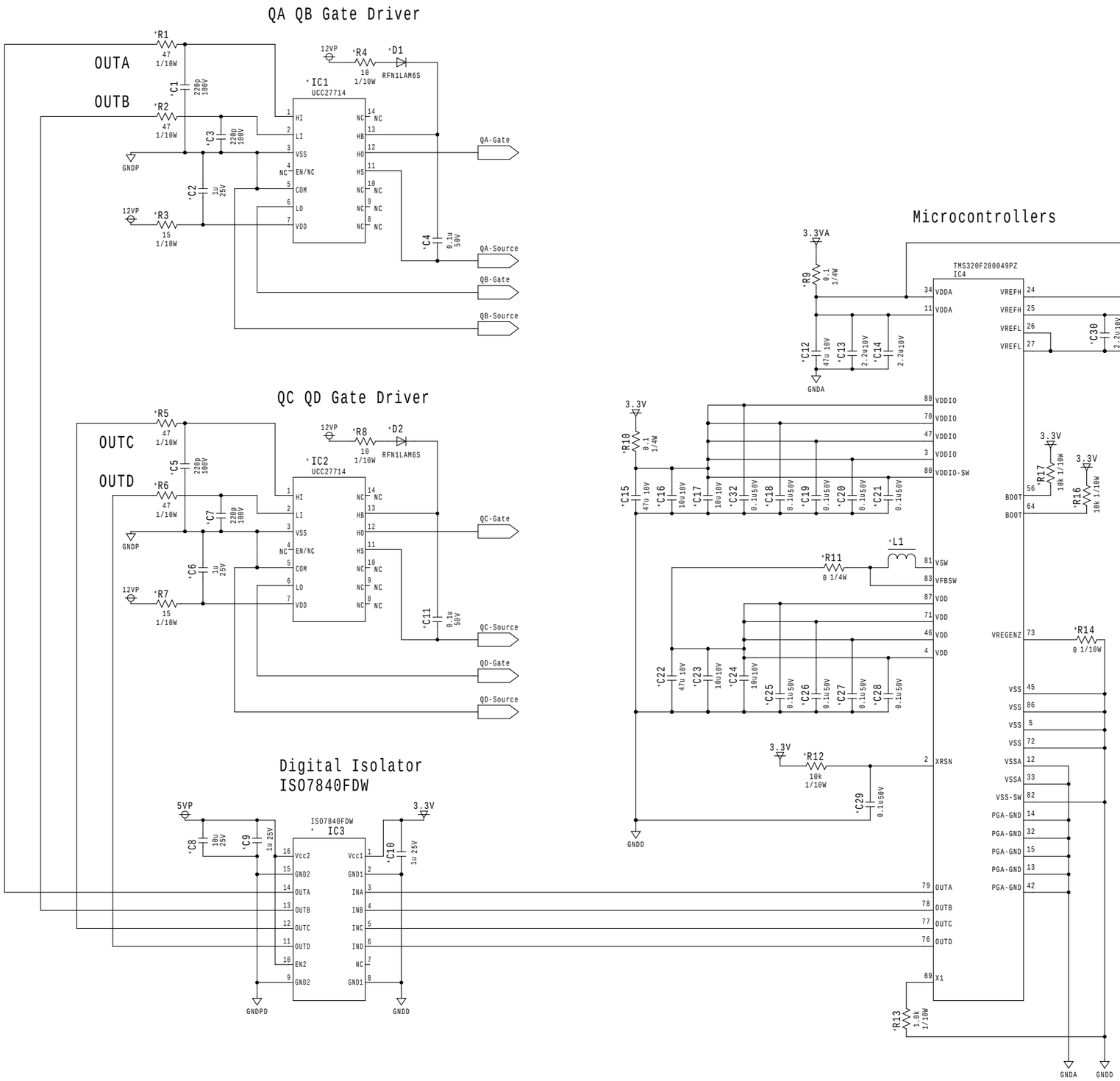
QA QB Gate Driver
OUTA
OUTB
*R1
47
1/10W
*R2
47
1/10W
*C1
220p
100V
*C3
220p
100V
*C2
1u
25V
GNDP
12VP
*R3
15
1/10W
12VP
*R4
10
1/10W
*D1
RFN1LAM6S
*IC1
UCC27714
HI
LI
VSS
EN/NC
COM
LO
VDD
NC
HB
HO
HS
*C4
0.1u
50V
QA-Gate
QA-Source
QB-Gate
QB-Source
QC QD Gate Driver
OUTC
OUTD
*R5
47
1/10W
*R6
47
1/10W
*C5
220p
100V
*C7
220p
100V
*C6
1u
25V
GNDP
12VP
*R7
15
1/10W
12VP
*R8
10
1/10W
*D2
RFN1LAM6S
*IC2
UCC27714
*C11
0.1u
50V
QC-Gate
QC-Source
QD-Gate
QD-Source
Digital Isolator
ISO7840FDW
5VP
*C8
10u
25V
*C9
1u 25V
ISO7840FDW
IC3
Vcc2
GND2
OUTA
OUTB
OUTC
OUTD
EN2
GND2
Vcc1
GND1
INA
INB
INC
IND
NC
GND1
*C10
1u 25V
3.3V
GNDPD
GNDD
Microcontrollers
3.3VA
*R9
0.1
1/4W
TMS320F280049PZ
IC4
VDDA
VDDA
VREFH
VREFH
VREFL
VREFL
*R15
0 1/4W
*C12
47u 10V
*C13
2.2u10V
*C14
2.2u10V
*C30
2.2u10V
*C31
2.2u10V
GNDA
3.3V
*R10
0.1
1/4W
VDDIO
VDDIO
VDDIO
VDDIO
VDDIO-SW
*C15
47u 10V
*C16
10u10V
*C17
10u10V
*C32
0.1u50V
*C18
0.1u50V
*C19
0.1u50V
*C20
0.1u50V
*C21
0.1u50V
3.3V
*R17
10k 1/10W
3.3V
*R16
10k 1/10W
BOOT
BOOT
*L1
*R11
0 1/4W
VSW
VFBSW
VDD
VDD
VDD
VDD
*C22
47u 10V
*C23
10u10V
*C24
10u10V
*C25
0.1u50V
*C26
0.1u50V
*C27
0.1u50V
*C28
0.1u50V
VREGENZ
*R14
0 1/10W
VSS
VSS
VSS
VSS
VSSA
VSSA
VSS-SW
PGA-GND
PGA-GND
PGA-GND
PGA-GND
PGA-GND
3.3V
*R12
10k
1/10W
*C29
0 1u50V
XRSN
GNDD
OUTA
OUTB
OUTC
OUTD
X1
*R13
1.8k
1/10W
GNDA
GNDD