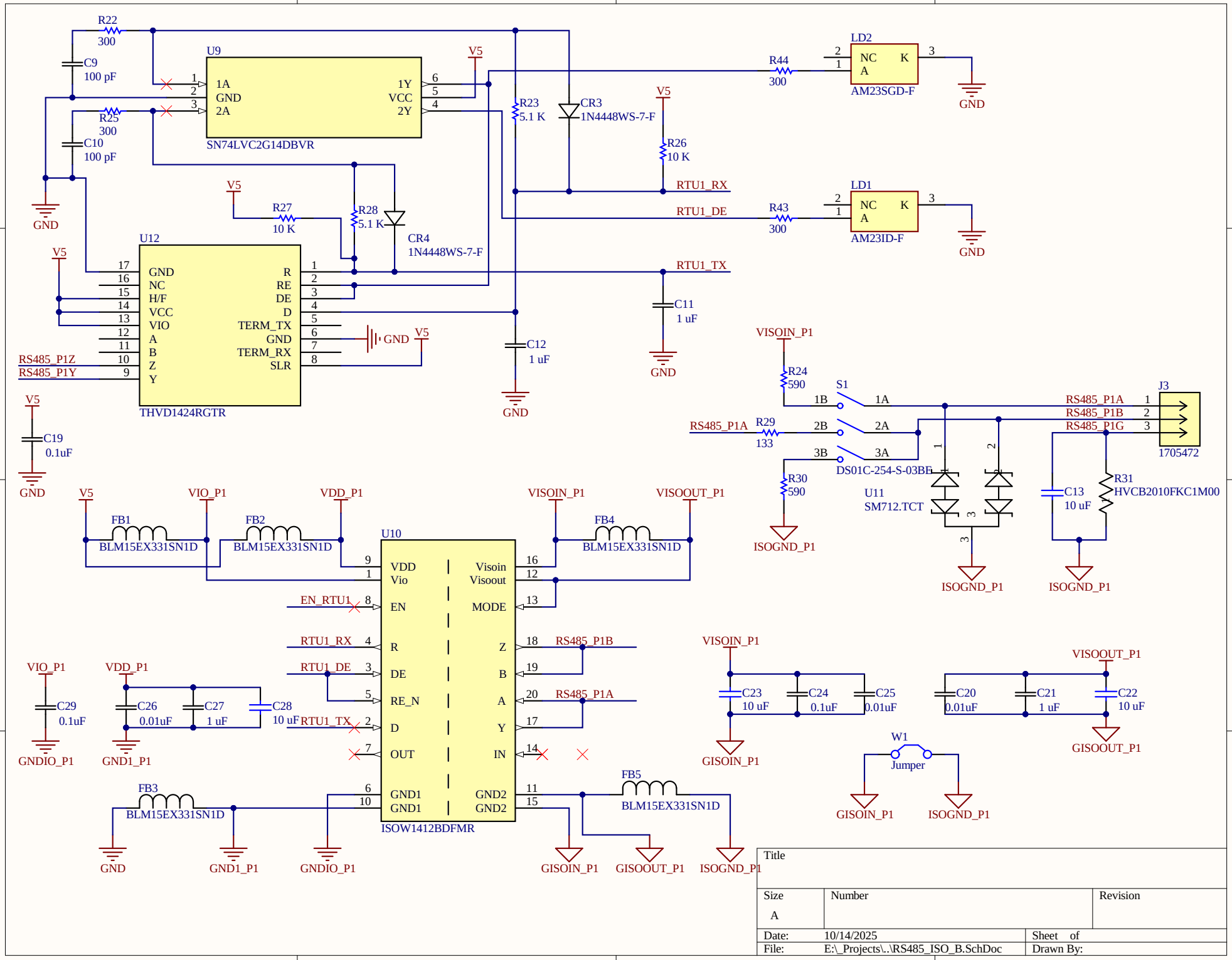
R22
300
C9
100 pF
U9
1A
GND
2A
1Y
VCC
2Y
SN74LVC2G14DBVR
V5
R25
300
C10
100 pF
GND
R23
5.1 K
CR3
1N4448WS-7-F
R44
300
LD2
NC
A
K
AM23SGD-F
R26
10 K
RTU1_RX
RTU1_DE
R43
300
LD1
AM23ID-F
R27
10 K
R28
5.1 K
CR4
1N4448WS-7-F
U12
GND
NC
H/F
VCC
VIO
A
B
Z
Y
R
RE
DE
D
TERM_TX
GND
TERM_RX
SLR
RS485_P1Z
RS485_P1Y
THVD1424RGTR
RTU1_TX
C11
1 uF
C12
1 uF
C19
0.1uF
VISOIN_P1
R24
590
S1
1B
1A
2B
2A
3B
3A
DS01C-254-S-03BE
RS485_P1A
R29
133
R30
590
ISOGND_P1
J3
RS485_P1A
RS485_P1B
RS485_P1G
1705472
U11
SM712.TCT
C13
10 uF
R31
HVCB2010FKC1M00
VIO_P1
VDD_P1
VISOUT_P1
FB1
BLM15EX331SN1D
FB2
FB4
U10
VDD
Vio
EN
R
DE
RE_N
D
OUT
GND1
Visoin
Visoout
MODE
Z
B
A
Y
IN
GND2
EN_RTU1
RS485_P1B
RS485_P1A
C29
0.1uF
GNDIO_P1
C26
0.01uF
C27
1 uF
C28
10 uF
GND1_P1
C23
10 uF
C24
0.1uF
C25
0.01uF
GISOIN_P1
C20
0.01uF
C21
1 uF
C22
10 uF
GISOOUT_P1
W1
Jumper
FB3
FB5
ISOW1412BDFMR
Title
Size
A
Number
Revision
Date:
10/14/2025
Sheet of
File:
E:_Projects\..\RS485_ISO_B.SchDoc
Drawn By: