GROUP-TEK®

承 认 书

RoHS

SPECIFICATION FOR APPROVAL

客户名称 CUSTOMER	
客户料号 MODEL NO	
产品名称 PART NAME	**TRANSFORMER**
产品型号 PART TYPE	**6PT3135XCR**
版 本 REV	**X0**
签 名 SIGNATURE	制 图：DRAWING BY 联泰兴 2019-3-14 LI F 审 核：CHECKED BY 联泰兴 2019-3-14 SGX 批 准：APPROVED BY 联泰兴 2019-3-14 ANGJIANG
客户承认 CUSTOMER APPROVAL	承认印：SIGNET 签 名：SIGNATURE

深 圳 市 联 泰 兴 电 子 科 技 有 限 公 司

SHENZHEN GROUP-TEK ELECTRONICS TECHNOLOGY CO.，LTD

地 址 ：深圳市宝安区石岩街道应人石工业区伟泰路 1栋 2-5楼

ADD: Floor 2-5, No.1 Block, WeiTai Rd. Ying Ren Shi Industry Park, Shi Yan Sub-District, Bao'An ShenZhen,China

TEL：+86-755-29810619 29810976 FAX：+86-755-29810159

Http://www.group-tek.com E-mail:sale1@group-tek.com

Revision History:

Revision	Revision Descriptions	Drawing by	Checked by	Approved by	Issued date
X0	Quotation Release	LL F	GX Song	Jiang Wang	2018/9/29

LAN TRANSFORMER

Features:

- Smaller package design for LAN filter application.
- Return loss meets the requirements of IEEE802.3.
- Designed for reflow soldering at temperatures up to 260℃ .
- RoHS compliance.

Electrical Specification@25℃ Operating Temperature -40℃ to +125℃						
Part No	Turns Ratio (Pri:Sec ±5%)	OCL 10KHz 100mV, (pin1-3 uH Min)	DCR OHM Max.	DCR OHM Max.	Primary pins	Hi-POT pri->sec, 50Hz
			1~3	6~4		
6PT3135XCR	1CT:2CT	475	0.7	1.0	1-3	3125VAC/1mA/1S

Dimension:mm(inch),Unless otherwise specified , all tolerance are±0.25(0.01)

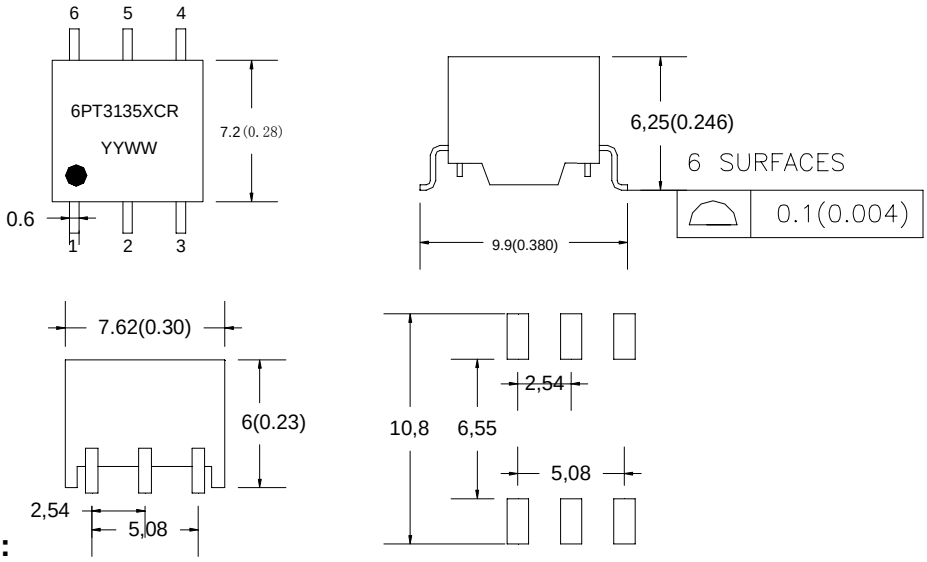

Schematic:

1CT:2CT

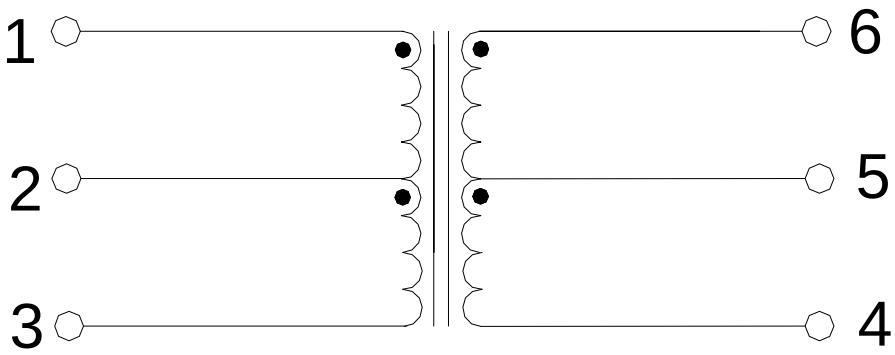

1.Condition :

1.1 Available for all the through hole parts.
1.2 Soldering Method: IR Reflow.
1.3 Solder:Sn99/Ag0.3/Cu0.7
1.4 The recommended Lead Free IR Reflow Soldering Curve:

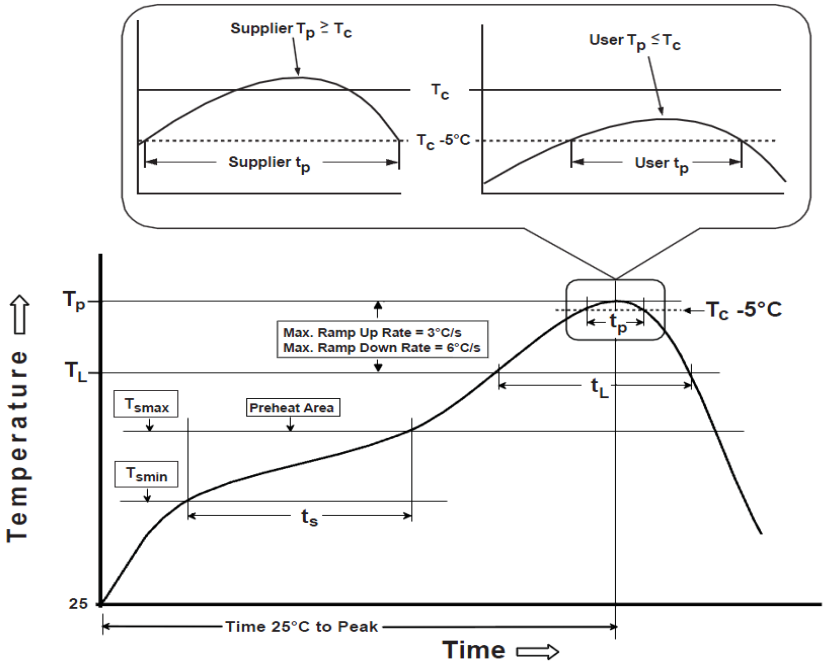

Item	Profile Feature	Sn-Pb Eutectic Assembly	Pb-Free Assembly
1	Preheat/Soak Temperature Min (Tsmin) Temperature Max (Tsmax) Time (ts) from (Tsmin to Tsmax)	100 °C 150 °C 60-120 seconds	150 °C 200 °C 60-120 seconds
2	Ramp-up rate (TL to Tp)	3 °C/second max.	3 °C/second max.
3	Liquidous temperature (TL) Time (tL) maintained above TL	183 ° C 60-150 seconds	217 ° C 60-150 seconds
4	Peak package body temperature (Tp)	For users Tp must not exceed the Classification temp in Table 4-1(IPC/JEDEC J-STD-020D.1). For suppliers Tp must equal or exceed the Classification temp in Table 4-1(IPC/JEDEC J-STD-020D.1).	For users Tp must not exceed the Classification temp in Table 4-2(IPC/JEDEC J-STD-020D.1). For suppliers Tp must equal or exceed the Classification temp in Table 4-2(IPC/JEDEC J-STD-020D.1).
5	Time (tp)* within 5 ° C of the specified classification temperature (Tc), seeFigure 5-1(IPC/JEDEC J-STD-020D.1).	20* seconds	30* seconds
6	Ramp-down rate (Tp to TL)	6 ° C/second max.	6 ° C/second max.
7	Time 25 ° C to peak temperature	6 minutes max.	8 minutes max.
* Tolerance for peak profile temperature (Tp) is defined as a supplier minimum and a user maximum.			

Note 1: All temperatures refer to the center of the package, measured on the package body surface that is facing up during assembly reflow (e.g., live-bug). Ifparts are reflowed in other than the normal live-bug assembly reflow orientation (i.e., dead-bug), Tp shall be within ± 2 °C of the live-bug Tp and still

To accurately measure actual peak package body temperaturesrefer to JEP140 for recommended thermocouple use.meet the Tc requirements, otherwise, the profile shall be adjusted to achieve the latter.

Note 2: Reflow profiles in this document are for classification/preconditioning and are not meant to specify board assembly profiles. Actual board assembly profiles should be developed based on specific process needs and board designs and should not exceed the parameters in Table 5-2.For example, if Tc is 260 °C and time tp is 30 seconds, this means the following for the supplier and the user. For a supplier: The peak temperature must be at least 260 °C. The time above 255 °C must be at least 30 seconds.For a user: The peak temperature must not exceed 260 °C. The time above 255 °C must not exceed 30 seconds.

Note 3: All components in the test load shall meet the classification profile requirements.

Note 4: SMD packages classified to a given moisture sensitivity level by using Procedures or Criteria defined within any previous version of J-STD-020,JESD22-A112 (rescinded), IPC-SM-786 (rescinded) do not need to be reclassified to the current revision unless a change in classification level or a higher peak classification temperature is desired.

2. Reliability Test Criteria.

2.1 Operating temperature range: -40℃ to +125℃

2.2 Terminal strength: Pull test withstand 9.8N 60+/-0.5S no looseness or movement.

2.3 Solderbility: Dipped in 245℃+/-5℃ molten solder for 3+/-0.5 seconds,95% min shall be smooth any and bright

2.4 Resistance to soldering heat : Convection reflow condition setting: peak temperature at 260℃+0/-5℃ above 217℃ for 60-150 seconds, ramp-up rate 3℃/s. Ramp-down rate 6℃/s Max. No mechanical problem found. No electrical failure found per our specification.

2.5 Vibration: 1.5mm amplitude total excursion 10-55-10 Hz traversed in 1minute, x.y.z, axis for 2 hours. Shall not be any abnormality.

2.6 Random drop (Packing condition): Height 60cm, 3 times on the wood floorboard ,shall not be any abnormality.

2.7 Dry heat: 100+/-2℃ 96 hours.

2.8 Cold: -20+/-2℃ 96 hours.

2.9 Damp Heat: 60+/-2℃, 93+/-3% RH 96 hours.

2.10 Change of temperature: exposed 5 cycle; each consisting of 30 minutes at -20+/-2℃,2-3 minutes at 20+/-2℃,30 minutes at 85+/-2℃, 2-3 minutes at 20+/-2℃.

Remarks: After reliability test per item 7,8,9,10 in prior to the test as specified, the transformer / coil would be exposed to the room temperature for 1-2 hours,the component meets all requirements according to this specification.

Tape and Reel Package

1. Tape Size:

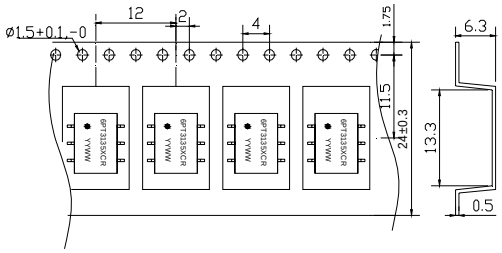

2. Reel Size:

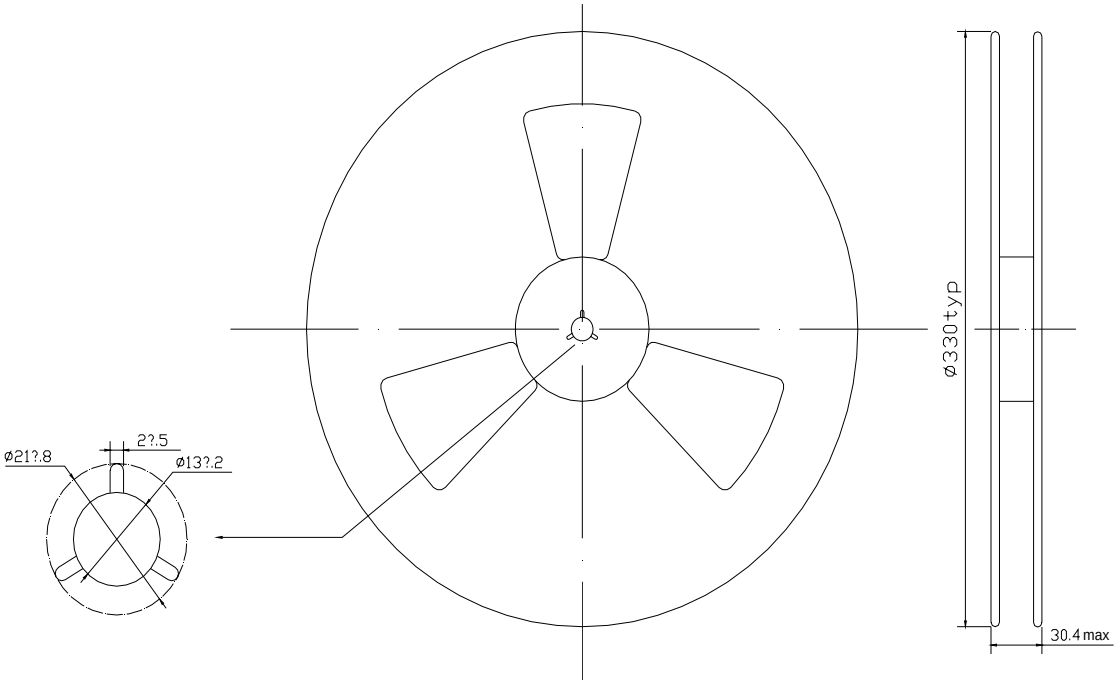

3. Packaging:

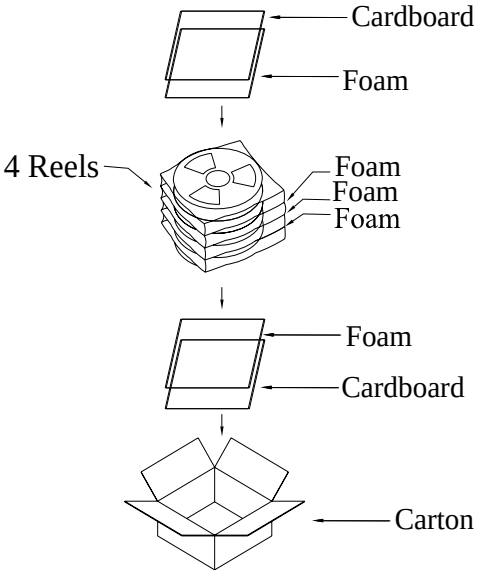

4.Carton Size and Packaging Quantities:

4.1 Quantity per reel: 750pcs.
4.2 Quantity per carton: 3000pcs.
4.3 Carton size: 36.8X36.8X20.5CM^3.
4.4 Unit weight: 0.46g.
4.5 Carton weight: 4.3kg.
4. 6. Product Made in China.
4.7 ESD level: No need.
4.8 Moisture sensitive level:1.
4.9 Storage Condition: ≦85℃/85% RH.
5.0.MSL moisture level 1.
5.1.SMD Packing EIA-481 standard.