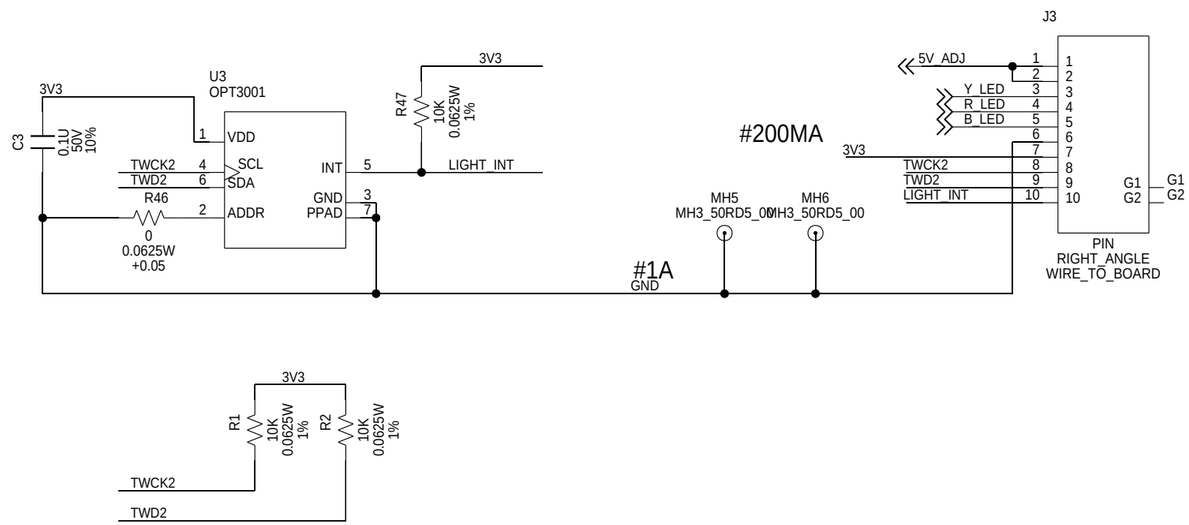

GE HEALTHCARE
COMPANY INTERNAL

Block Path	Block Sheet	Dwg No	Rev	Sheet
alarm	2 of 2	5873951SCH	2	4 of 4

Wed Sep 8 11:37:40 2021

B Size

REV 3 08Aug15