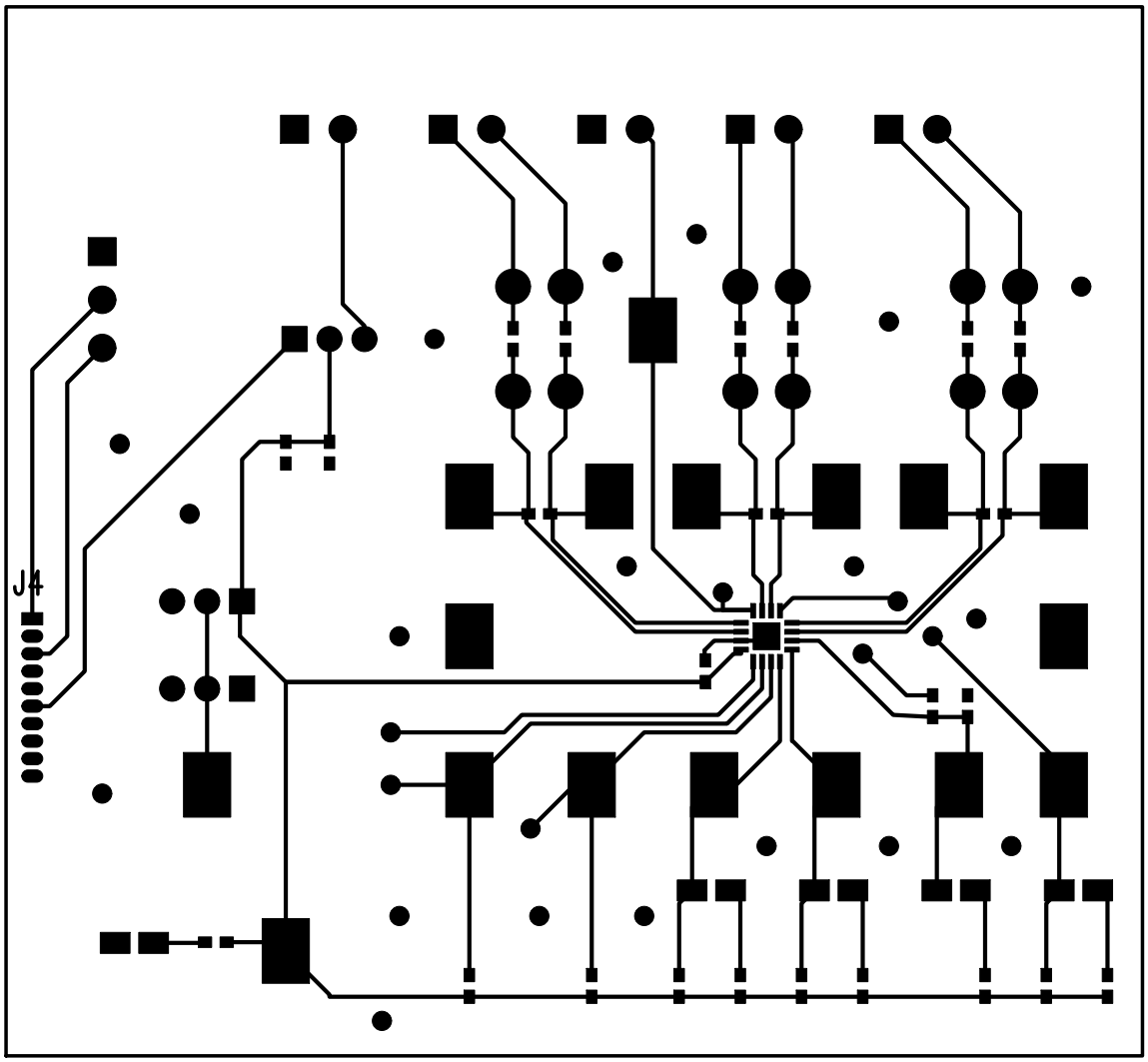
J4

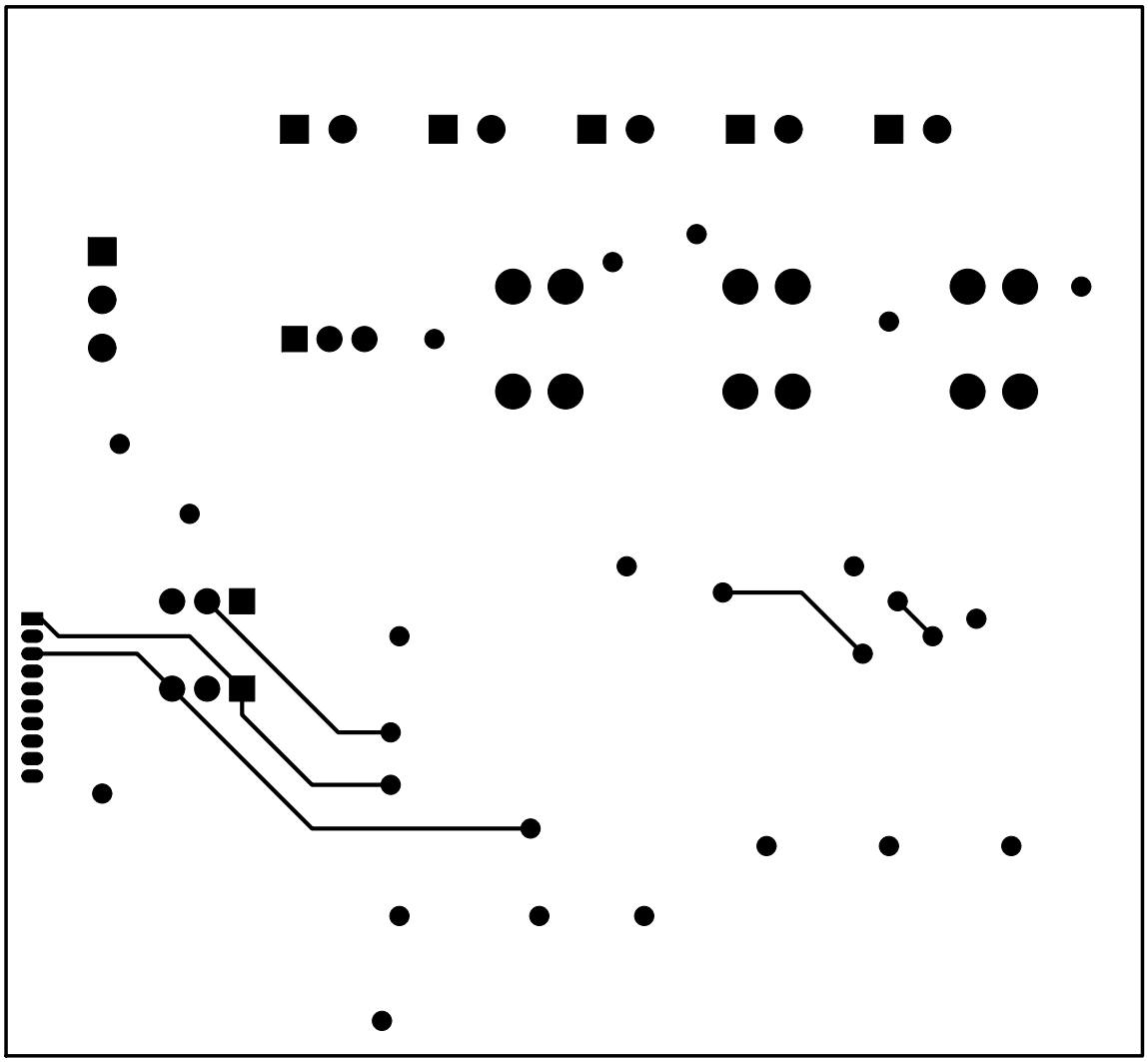

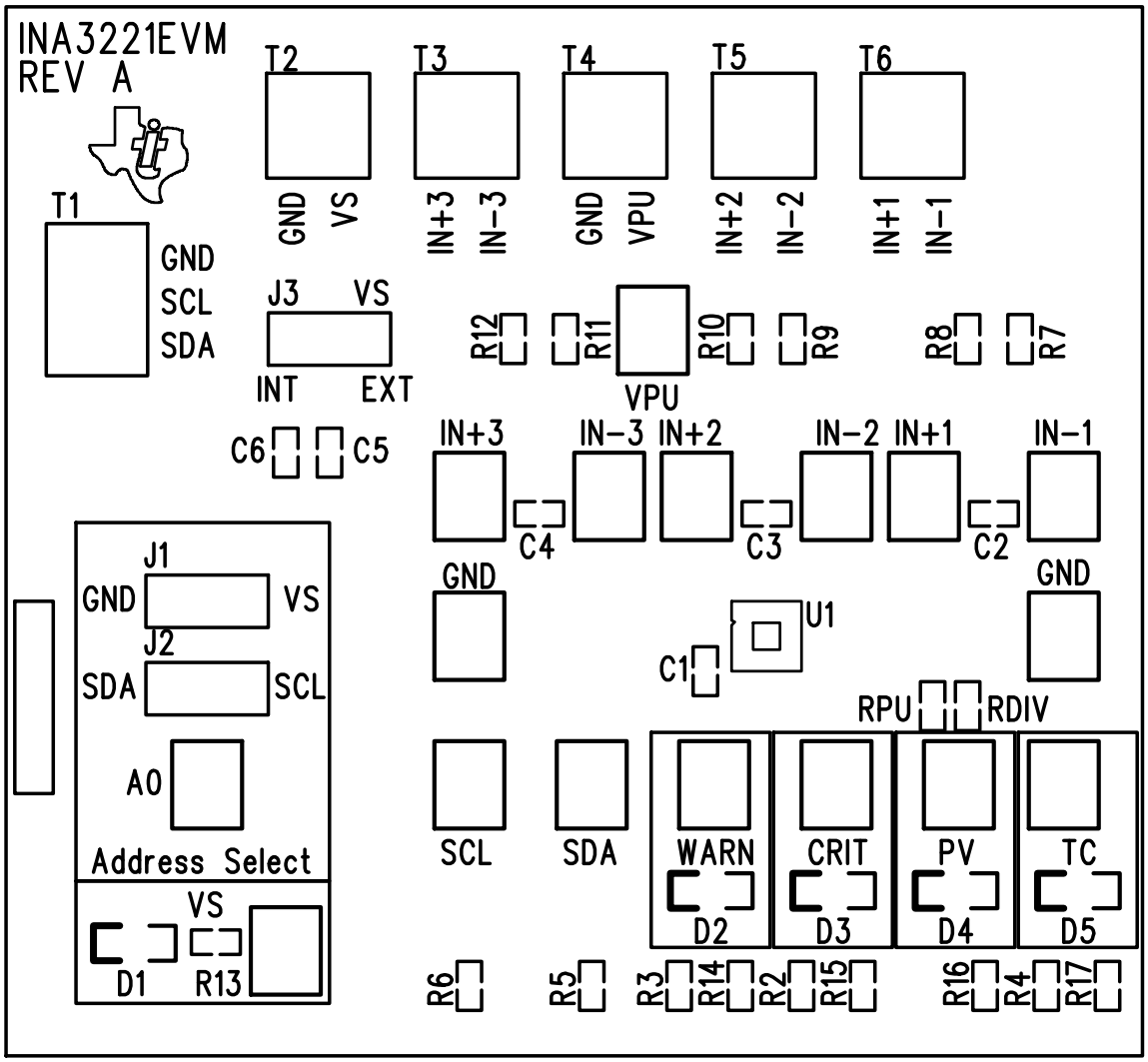
INA3221EVM
REV A
T1
GND
SCL
SDA
T2
GND
VS
T3
IN+3
IN-3
T4
GND
VPU
T5
IN+2
IN-2
T6
IN+1
IN-1
J3
VS
INT
EXT
R12
R11
VPU
R10
R9
R8
R7
C6
C5
IN+3
IN-3
IN+2
IN-2
IN+1
IN-1
C4
C3
C2
GND
GND
U1
C1
RPU
RDIV
J1
GND
VS
J2
SDA
SCL
A0
Address Select
VS
D1
R13
SCL
SDA
WARN
CRIT
PV
TC
D2
D3
D4
D5
R6
R5
R3
R14
R2
R15
R16
R4
R17

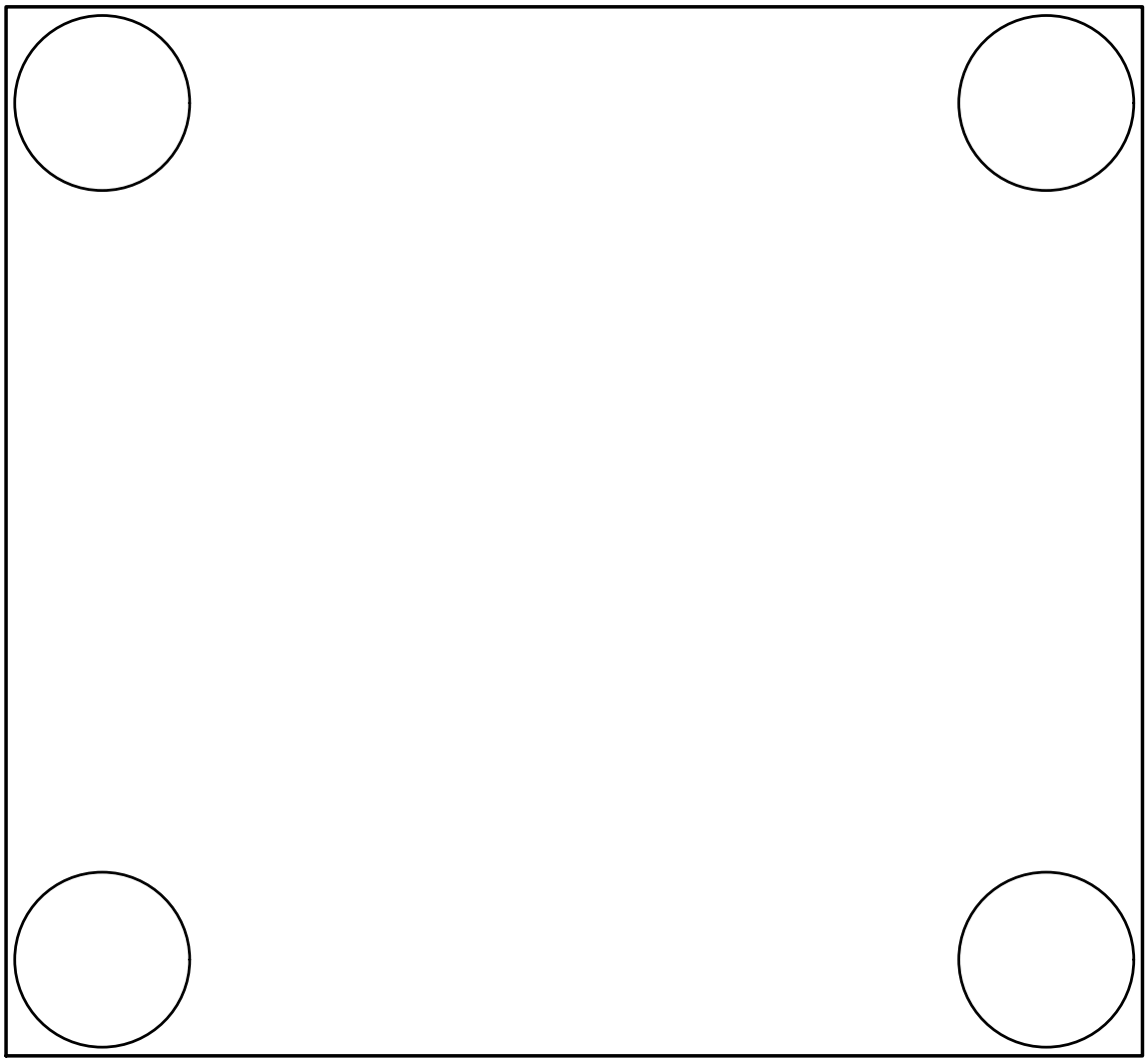

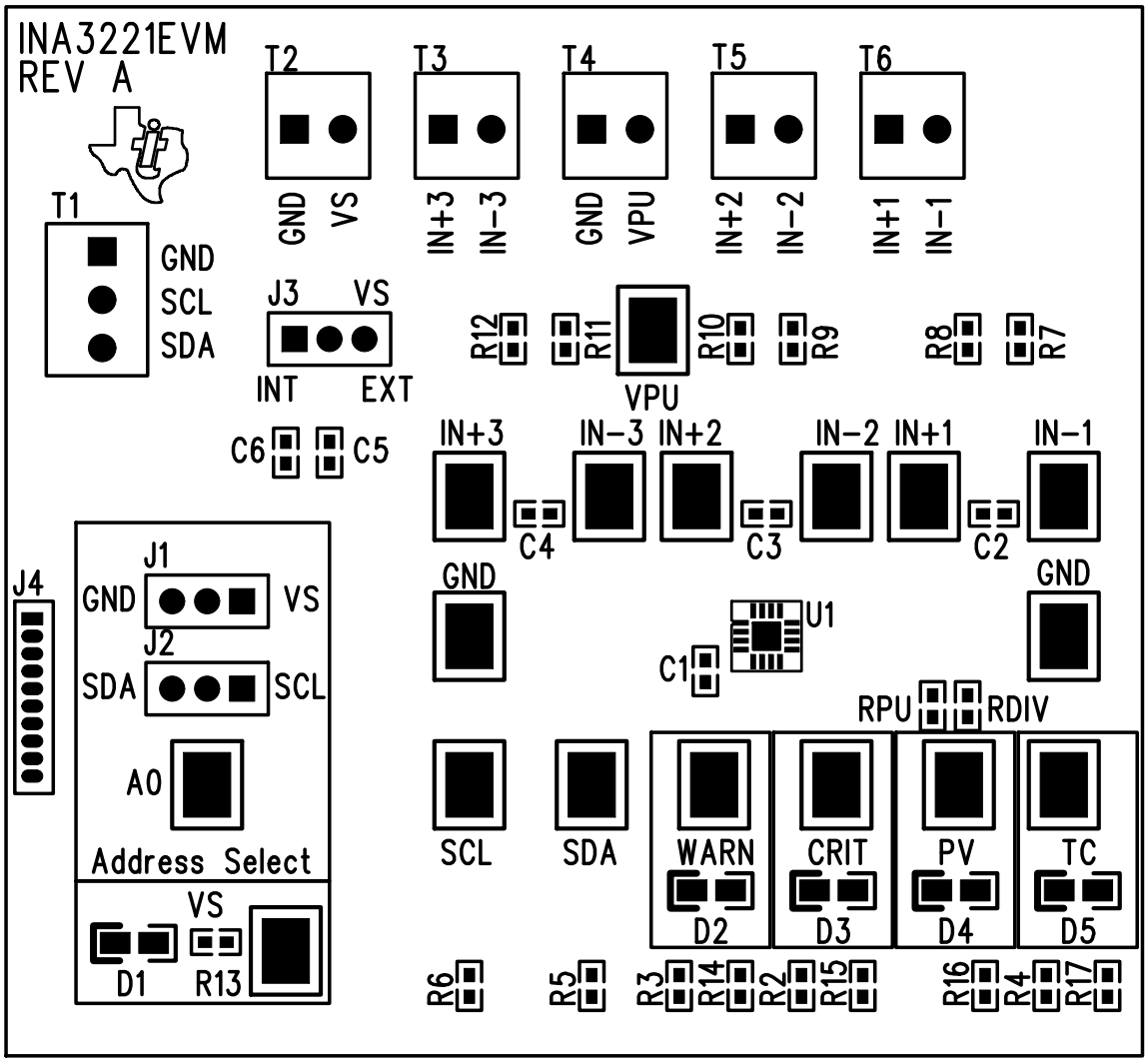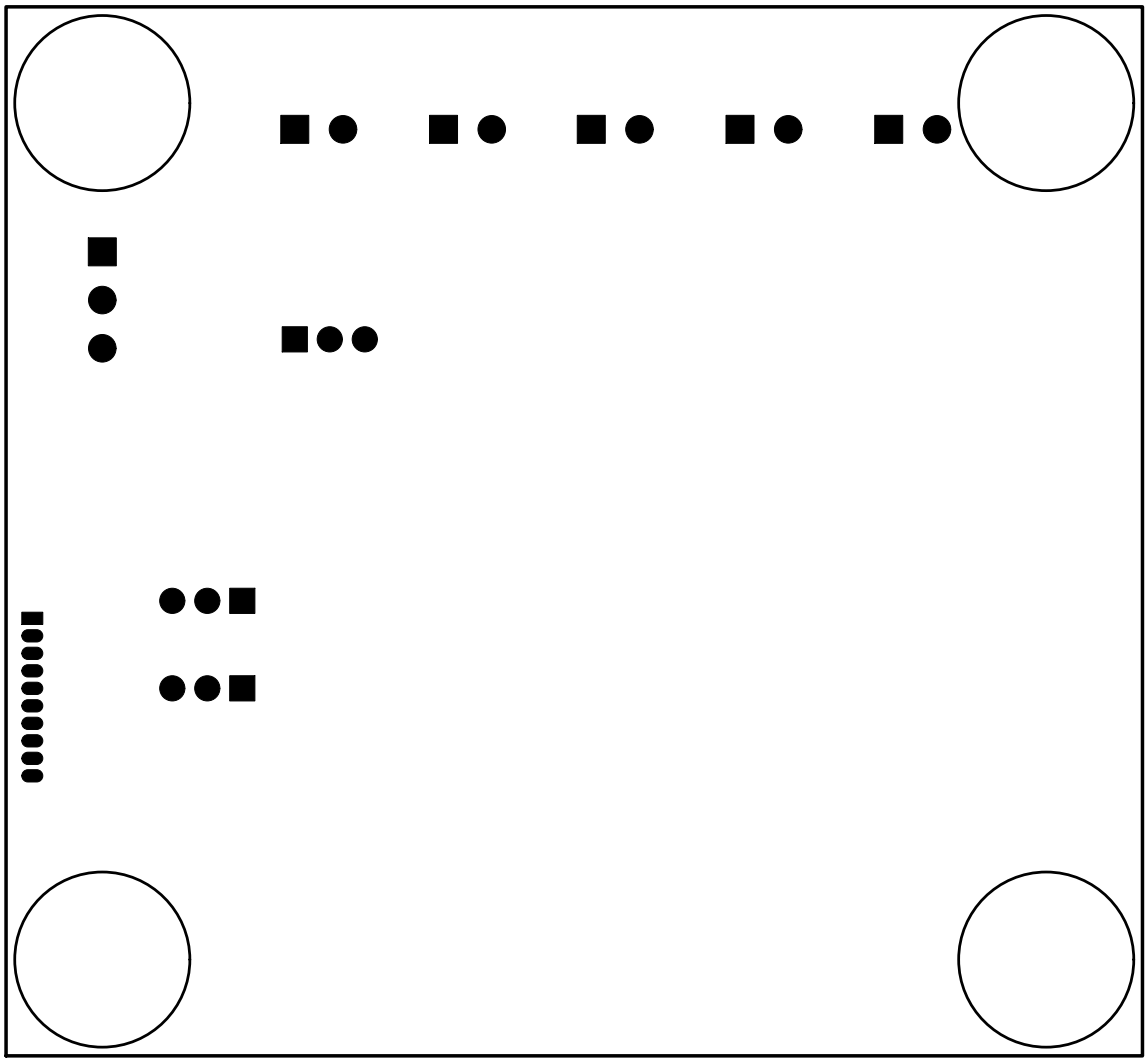
INA3221EVM
REV A
T2
T3
T4
T5
T6
GND
VS
IN+3
IN-3
GND
VPU
IN+2
IN-2
IN+1
IN-1
T1
GND
SCL
SDA
J3
VS
INT
EXT
R12
R11
R10
R9
R8
R7
VPU
C6
C5
IN+3
IN-3
IN+2
IN-2
IN+1
IN-1
C4
C3
C2
J4
J1
GND
VS
J2
SDA
SCL
GND
GND
U1
C1
RPU
RDIV
A0
Address Select
SCL
SDA
WARN
CRIT
PV
TC
VS
D1
R13
D2
D3
D4
D5
R6
R5
R3
R14
R2
R15
R16
R4
R17