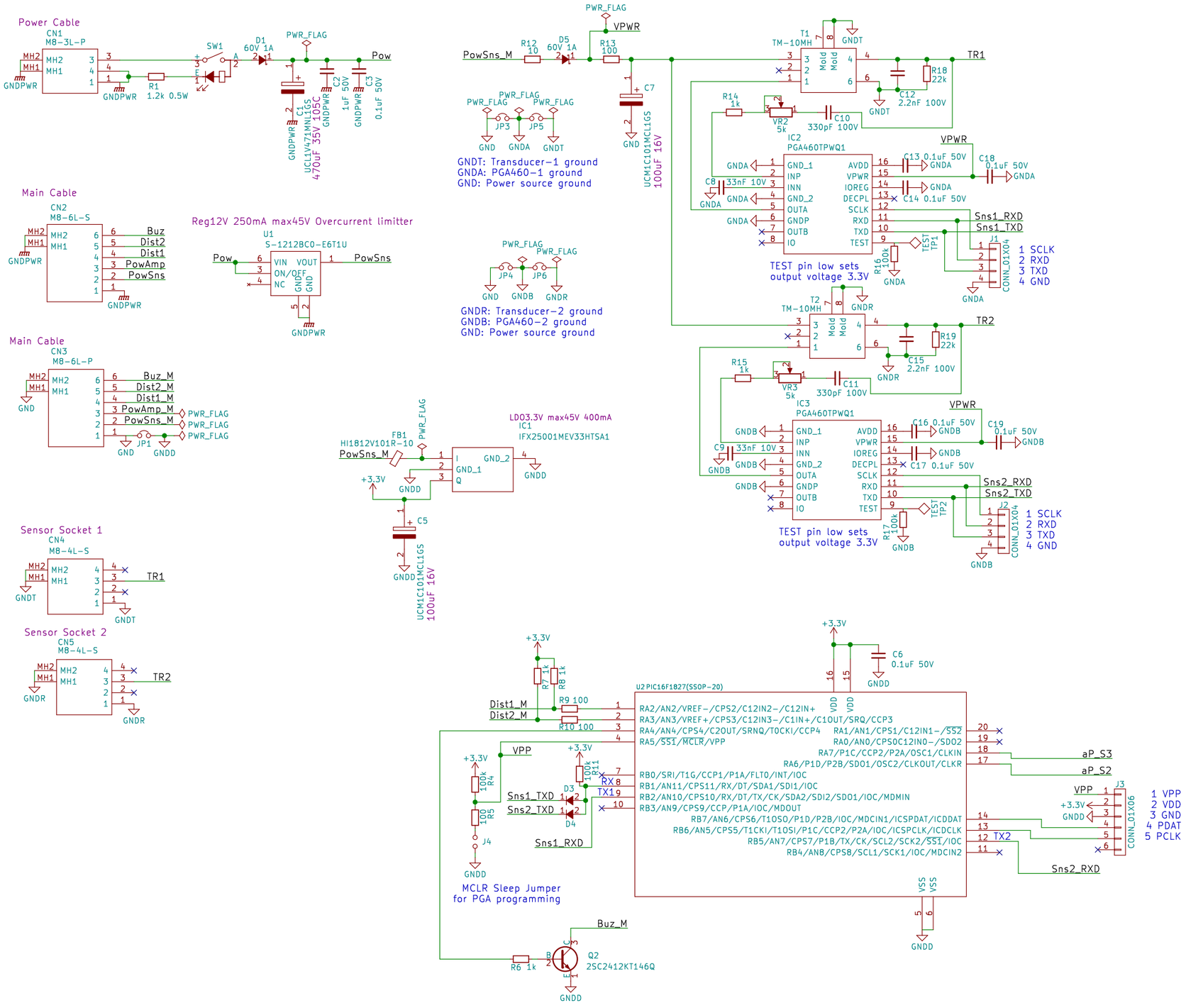
Power Cable
CN1
M8-3L-P
MH2
MH1
GNDPWR
R1
1.2k 0.5W
SW1
D1
60V 1A
PWR_FLAG
Pow
C1
UCL1V471MNL1GS
470uF 35V 105C
C2
1uF 50V
C3
0.1uF 50V
Main Cable
CN2
M8-6L-S
Buz
Dist2
Dist1
PowAmp
PowSns
Reg12V 250mA max45V Overcurrent limitter
U1
S-1212BC0-E6T1U
VIN
VOUT
ON/OFF
NC
GND
PowSns
Main Cable
CN3
M8-6L-P
Buz_M
Dist2_M
Dist1_M
PowAmp_M
PowSns_M
JP1
GND
GNDD
Sensor Socket 1
CN4
M8-4L-S
TR1
GNDT
Sensor Socket 2
CN5
M8-4L-S
TR2
GNDR
PowSns_M
R12
10
D5
60V 1A
R13
100
VPWR
C7
UCM1C101MCL1GS
100uF 16V
JP3
JP5
GNDT: Transducer-1 ground
GNDA: PGA460-1 ground
GND: Power source ground
JP4
JP6
GNDB
GNDR: Transducer-2 ground
GNDB: PGA460-2 ground
GND: Power source ground
T1
TM-10MH
Mold
R18
22k
C12
2.2nF 100V
R14
1k
VR2
5k
C10
330pF 100V
IC2
PGA460TPWQ1
GND_1
INP
INN
GND_2
OUTA
GNDP
OUTB
IO
AVDD
VPWR
IOREG
DECPL
SCLK
RXD
TXD
TEST
C13 0.1uF 50V
C18
0.1uF 50V
C8
33nF 10V
C14 0.1uF 50V
Sns1_RXD
Sns1_TXD
TEST
TP1
R16
100k
J1
CONN_01X04
1 SCLK
2 RXD
3 TXD
4 GND
TEST pin low sets
output voltage 3.3V
T2
TM-10MH
R19
22k
C15
2.2nF 100V
R15
1k
VR3
5k
C11
330pF 100V
IC3
PGA460TPWQ1
C16 0.1uF 50V
C19
0.1uF 50V
C9
33nF 10V
C17 0.1uF 50V
Sns2_RXD
Sns2_TXD
TEST
TP2
R17
100k
J2
CONN_01X04
1 SCLK
2 RXD
3 TXD
4 GND
TEST pin low sets
output voltage 3.3V
FB1
HI1812V101R-10
+3.3V
LDO3.3V max45V 400mA
IC1
IFX25001MEV33HTSA1
GND_1
GND_2
C5
UCM1C101MCL1GS
100uF 16V
C6
0.1uF 50V
U2 PIC16F1827(SSOP-20)
RA2/AN2/VREF-/CPS2/C12IN2-/C12IN+
RA3/AN3/VREF+/CPS3/C12IN3-/C1IN+/C1OUT/SRQ/CCP3
RA4/AN4/CPS4/C2OUT/SRNQ/T0CKI/CCP4
RA5/SS1/MCLR/VPP
RA1/AN1/CPS1/C12IN1-/SS2
RA0/AN0/CPS0C12IN0-/SDO2
RA7/P1C/CCP2/P2A/OSC1/CLKIN
RA6/P1D/P2B/SDO1/OSC2/CLKOUT/CLKR
RB0/SRI/T1G/CCP1/P1A/FLT0/INT/IOC
RB1/AN11/CPS11/RX/DT/SDA1/SDI1/IOC
RB2/AN10/CPS10/RX/DT/TX/CK/SDA2/SDI2/SDO1/IOC/MDMIN
RB3/AN9/CPS9/CCP/P1A/IOC/MDOUT
RB7/AN6/CPS6/T1OSO/P1D/P2B/IOC/MDCIN1/ICSPDAT/ICDDAT
RB6/AN5/CPS5/T1CKI/T1OSI/P1C/CCP2/P2A/IOC/ICSPCLK/ICDCLK
RB5/AN7/CPS7/P1B/TX/CK/SCL2/SCK2/SS1/IOC
RB4/AN8/CPS8/SCL1/SCK1/IOC/MDCIN2
VDD
VSS
R9 100
R10 100
Dist1_M
Dist2_M
R7 1k
R8 1k
R11 100k
RX
TX1
D3
D4
Sns1_TXD
Sns2_TXD
Sns1_RXD
R4 100k
R5 100
J4
VPP
MCLR Sleep Jumper
for PGA programming
aP_S3
aP_S2
TX2
Sns2_RXD
J3
CONN_01X06
1 VPP
2 VDD
3 GND
4 PDAT
5 PCLK
Buz_M
R6 1k
Q2
2SC2412KT146Q
GNDD