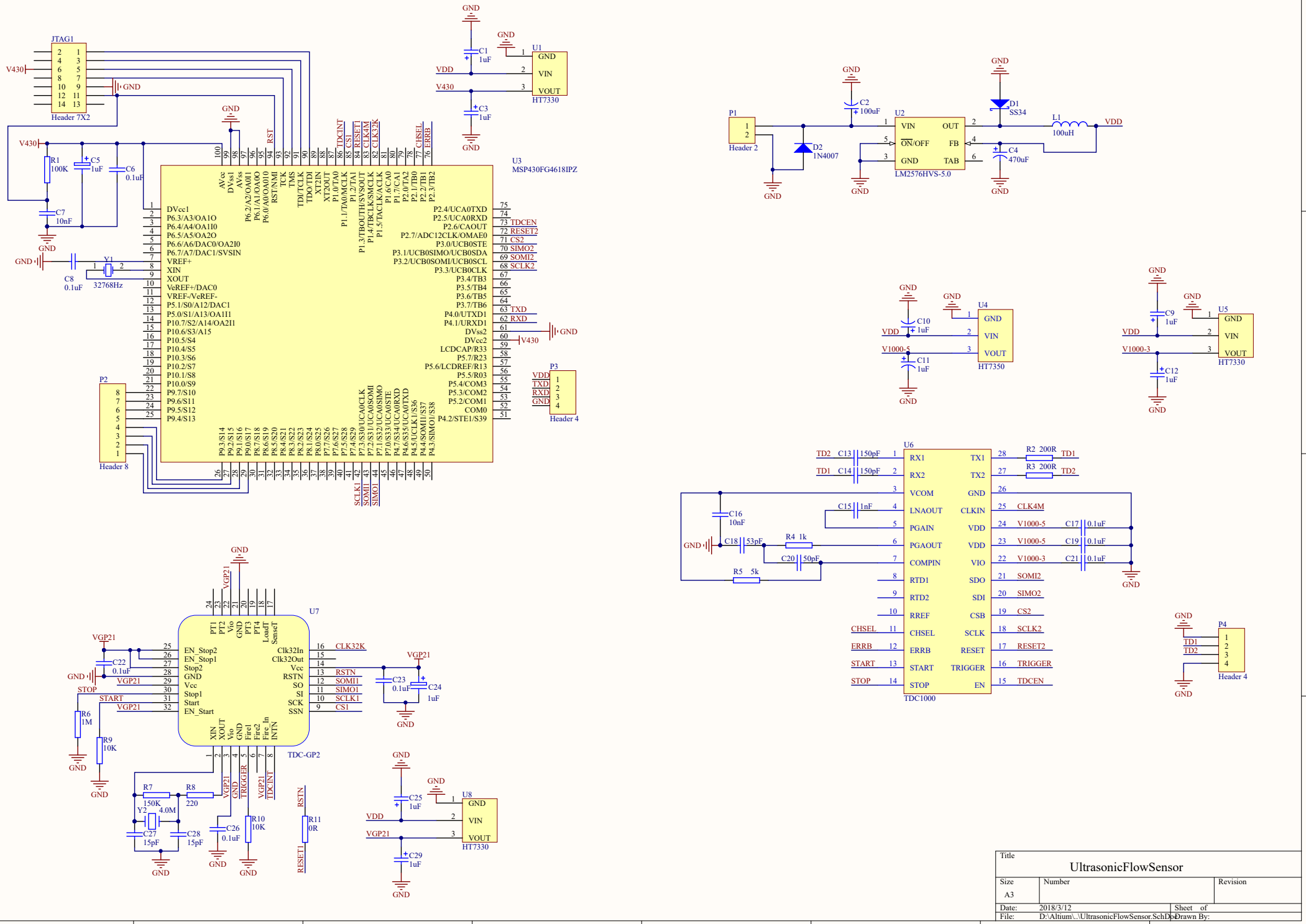
JTAG1
Header 7X2
U1
HT7330
U2
LM2576HVS-5.0
U3
MSP430FG4618IPZ
U4
HT7350
U5
HT7330
U6
TDC1000
U7
TDC-GP2
U8
HT7330
P1
Header 2
P2
Header 8
P3
Header 4
P4
Header 4
Y1
32768Hz
Title
UltrasonicFlowSensor
Size
A3
Number
Revision
Date: 2018/3/12
Sheet of
File: D:\Altium\..\UltrasonicFlowSensor.SchDoc
Drawn By:

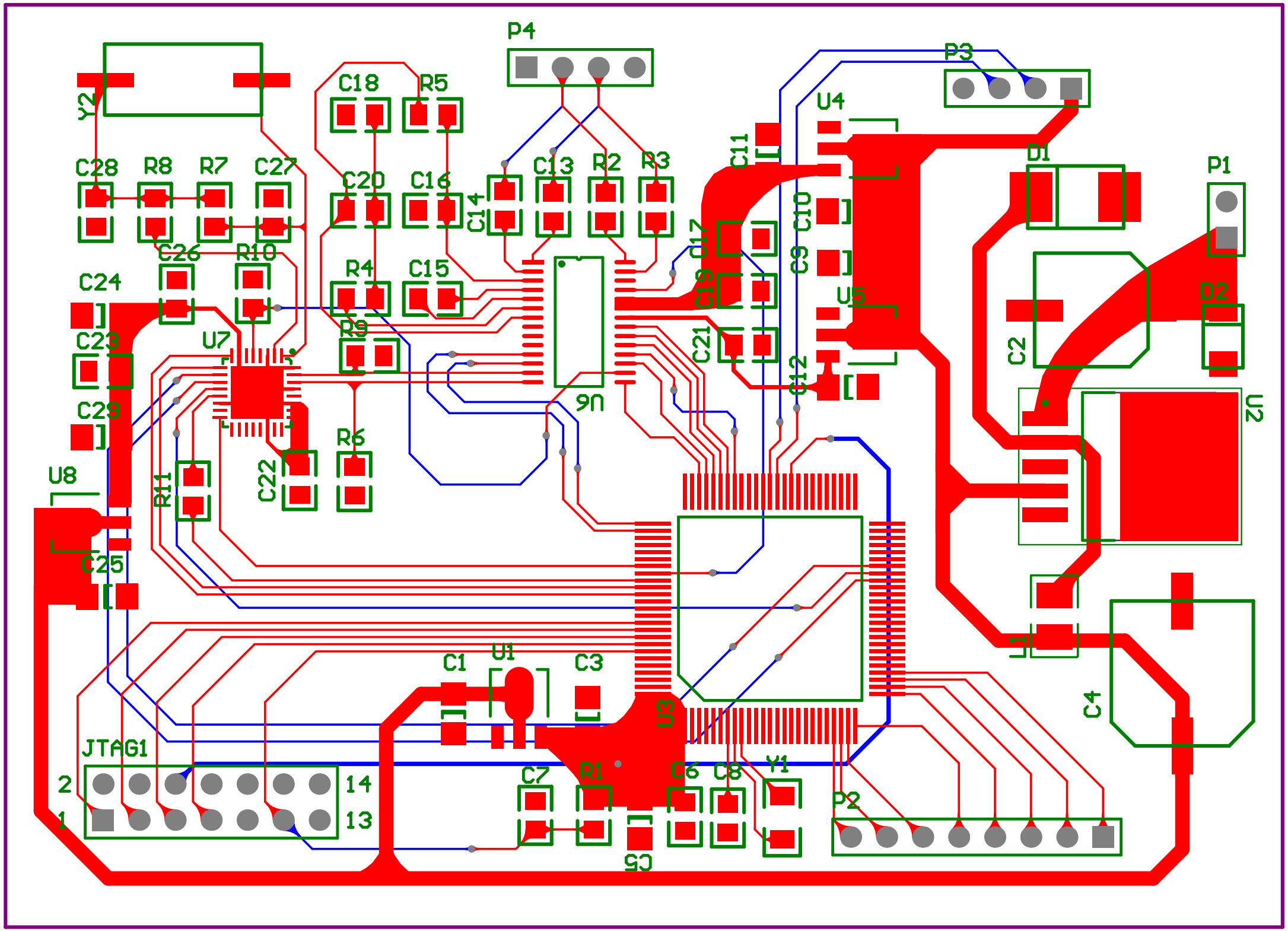
P4
P3
Y2
C18
R5
U4
C28
R8
R7
C27
C20
C16
C14
C13
R2
R3
C11
D1
P1
C26
R10
R4
C15
C17
C19
C9
C10
U5
D2
C24
C23
U7
R9
C21
C12
C2
U2
C29
U6
R6
U8
R11
C22
C25
C1
U1
C3
U3
C4
JTAG1
2
1
14
13
C7
R1
C6
C8
Y1
P2
C5