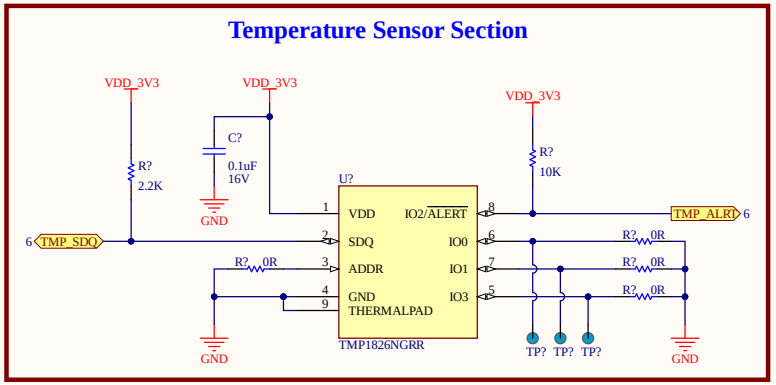Temp Sensor and RGB LED Driver Section