MODULE REV DETAILS		
MODULE NAME	REV	DATE

TEMPERATURE SENSOR

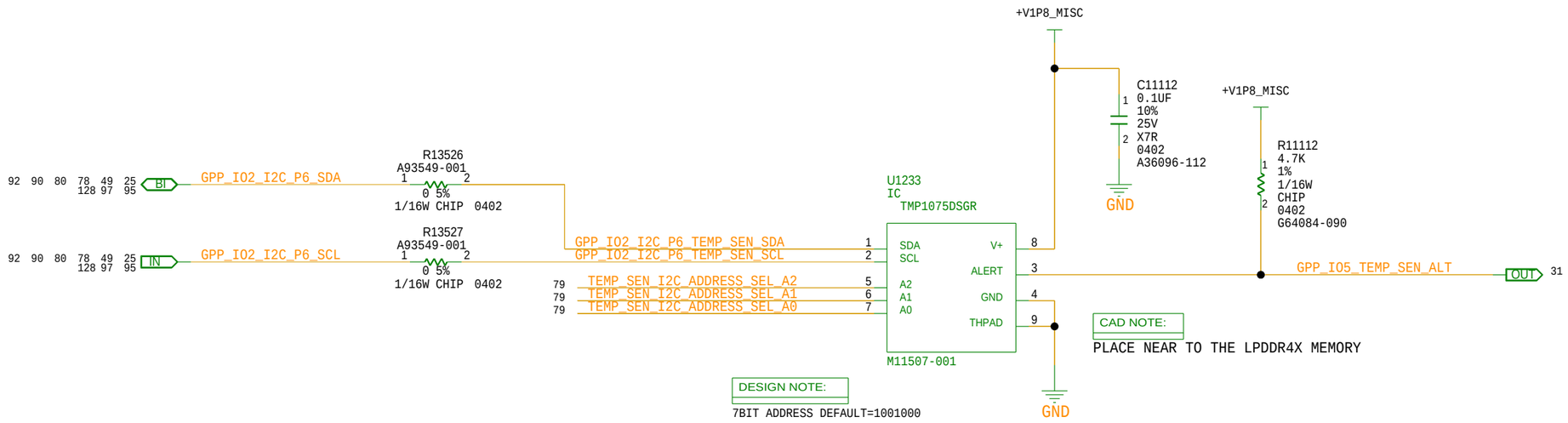

I2C ADDRESS SELECTION

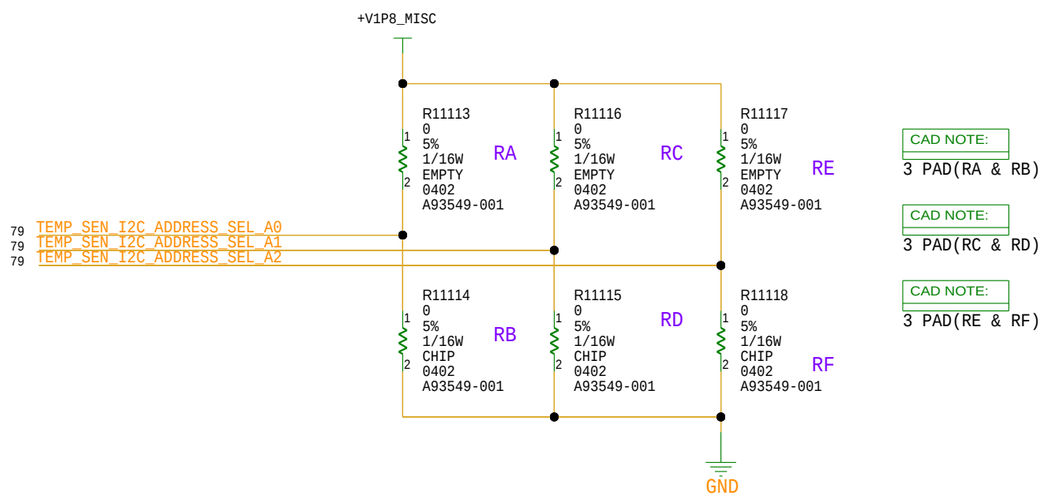

[PAGE_TITLE=DDR THERMAL SENSOR]

BPAGE DRAWING
pd_schematics.sch_1.79
Sun Nov 01 18:40:30 2020

INTEL CONFIDENTIAL	DOCUMENT_NUMBER	PAGE	REV
	<DOCUMENT_NUMBER>	79	<REV>

CUSTOM TEXT BPAGE