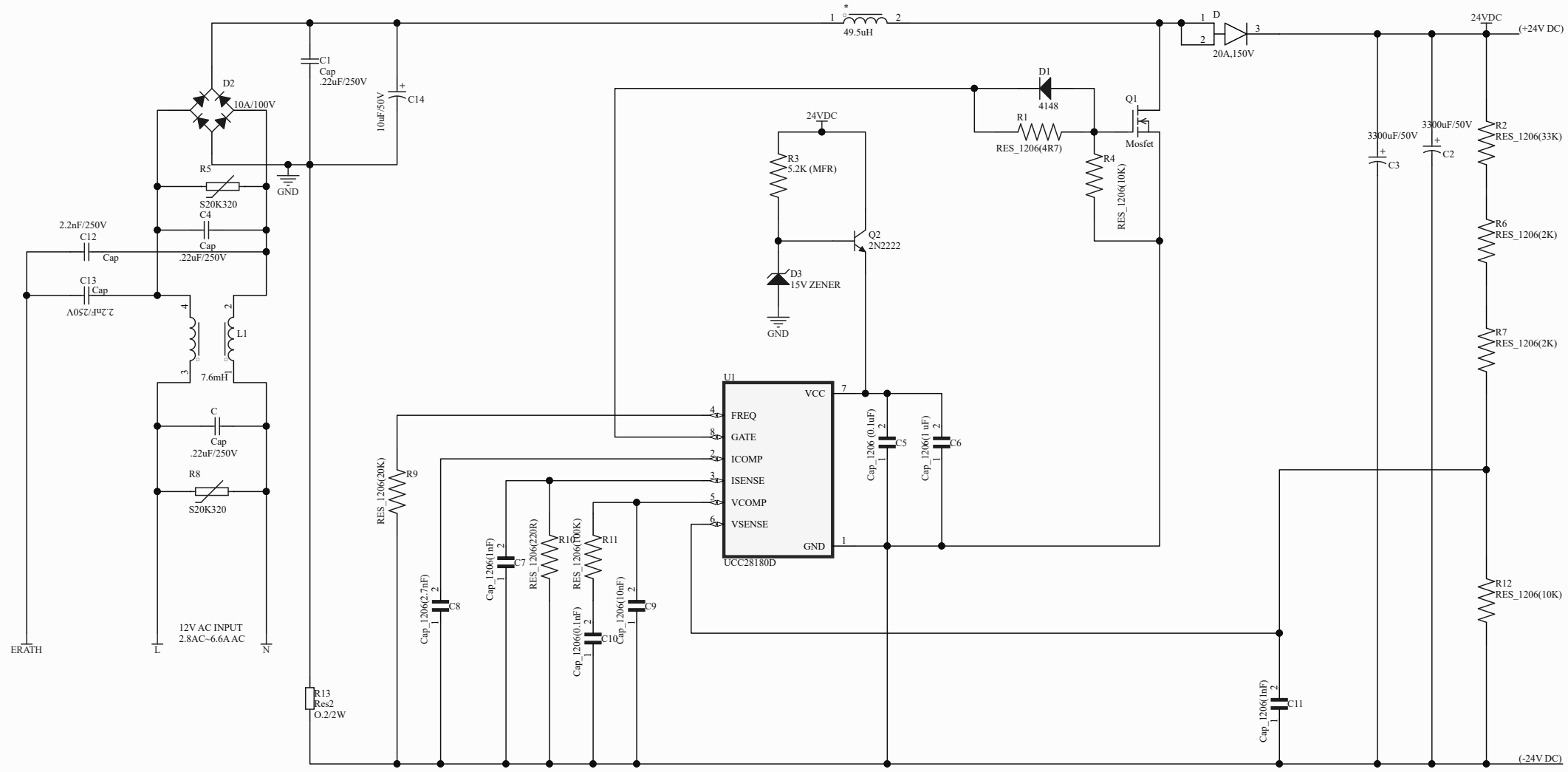

Title	SIGN BOARD DRIVER		
Size B	Number		Revision
Date:	25-04-2025	Sheet	of
File:	C:\Users\..\Sheet4.SchDoc	Drawn By:	