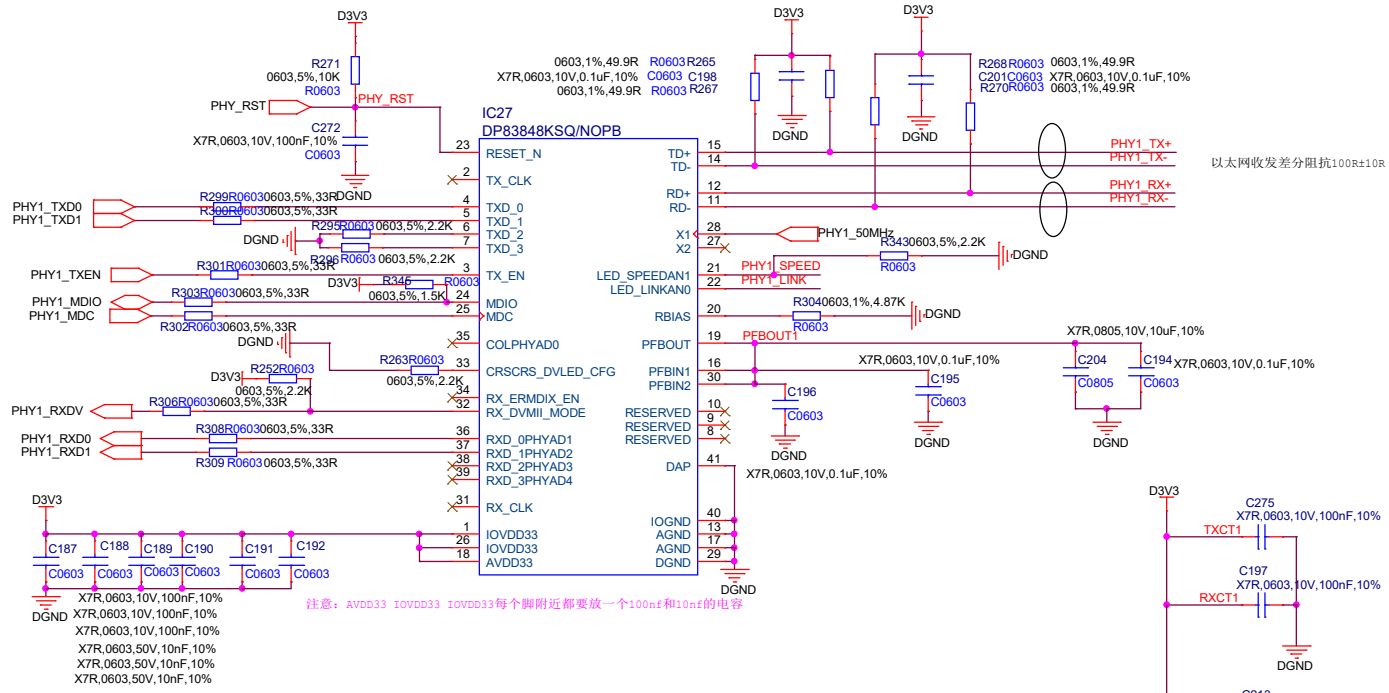

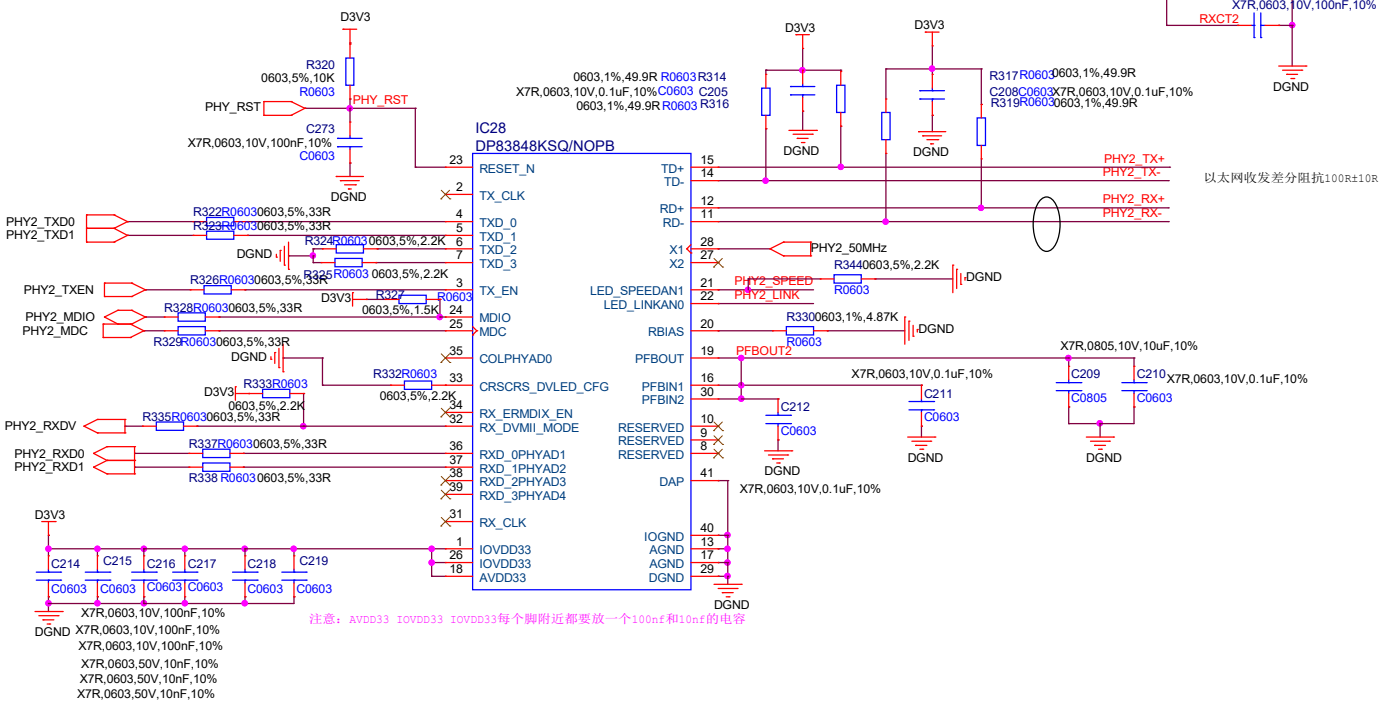

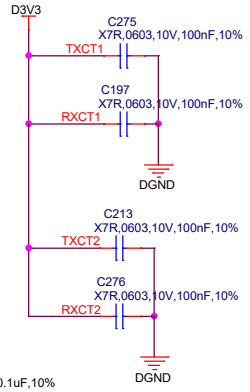

锁存状态配置表
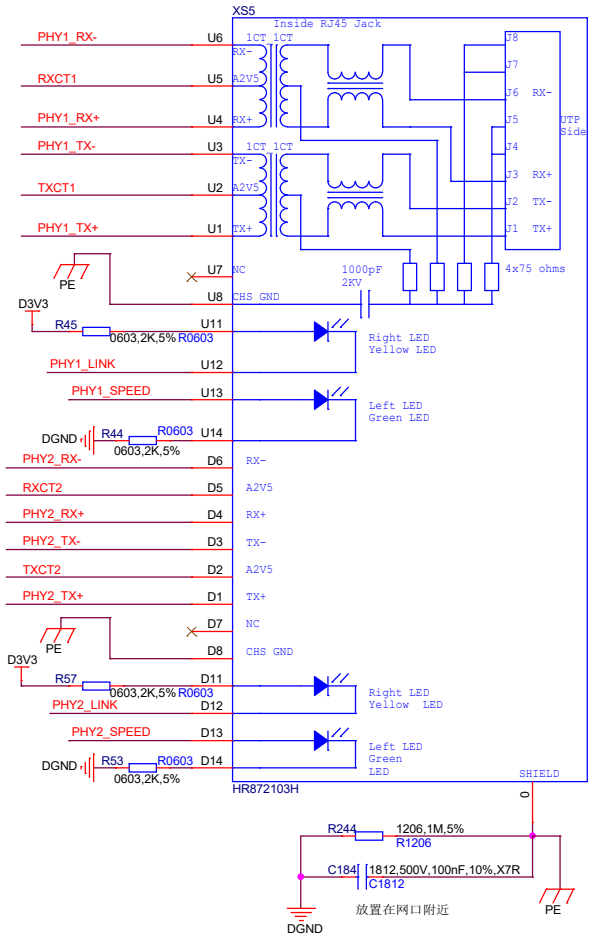
Pin	Pin Name	Type	Pin Function
35 36 37 38 39	PHYAD0 PHYAD1 PHYAD2 PHYAD3 PHYAD4	S, O, PU S, O, PD S, O, PD S, O, PD S, O, PD	硬件重置，初始状态锁存进PHYCTRL寄存器，初值为PHYAD[4:0]=00001
32	MII_MODE	S, O, PD	1=RMII mode
22 21	AN0 AN1	S, O, PU S, O, PU	AN[1:0]=0 1 100BASE-TX, Hal/Full-Duplex
33	LED_CFG CRS/CRS_DV	S, O, PU	0= LED_LINK: ON for good link Blink for activity LED_SPEED: ON in 100Mbps OFF in 10Mbps
34	RX_ER	S, O, PU	Default is enable MDIX