HDMI_DP2
HSD DS90UH949A-Q1

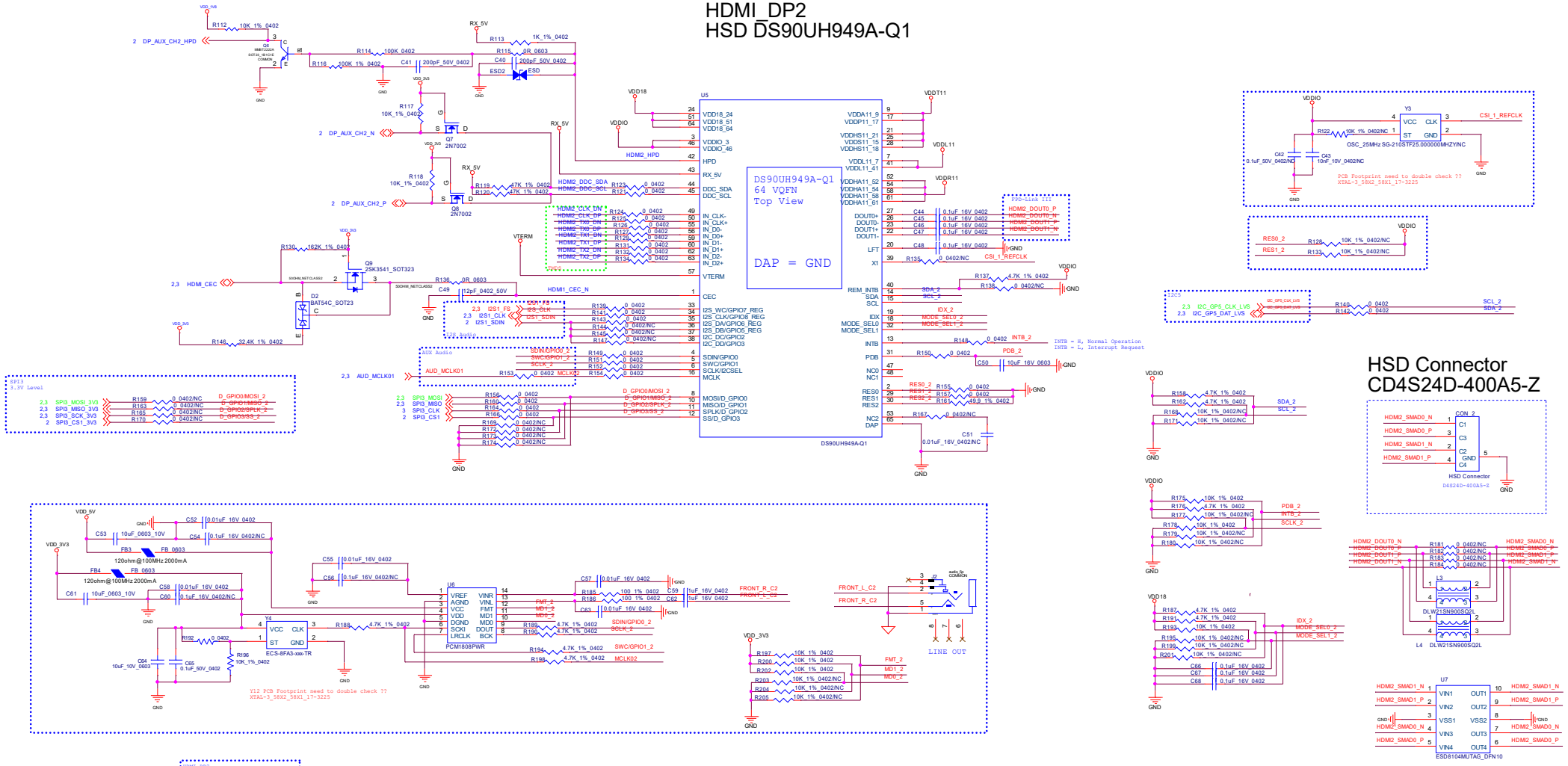

HSD Power

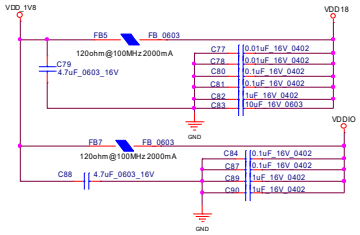
VDD_1V8
VDD18
FB5
FB_0603
120ohm@100MHz 2000mA
C79
4.7uF_0603_16V
C77 0.01uF_16V_0402
C78 0.01uF_16V_0402
C80 0.1uF_16V_0402
C81 0.1uF_16V_0402
C82 1uF_16V_0402
C83 10uF_16V_0603
GND
VDDIO
FB7
FB_0603
120ohm@100MHz 2000mA
C88 4.7uF_0603_16V
C84 0.1uF_16V_0402
C87 0.1uF_16V_0402
C89 1uF_16V_0402
C90 10uF_16V_0402
GND

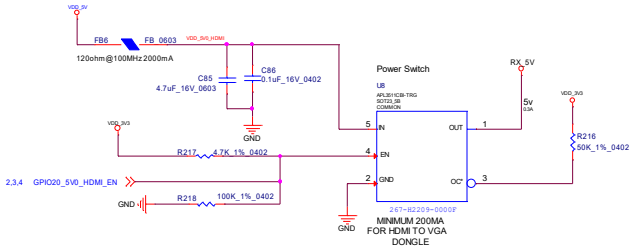
VDD_5V
FB6
FB_0603
VDD_5V0_HDMI
120ohm@100MHz 2000mA
C85
4.7uF_16V_0603
C86
0.1uF_16V_0402
GND
Power Switch
U8
APL3511CB-TRG
SOT23_3B
COMMON
RX_5V
5V
0.3A
VDD_3V3
R216
50K_1%_0402
VDD_3V3
R217 4.7K_1%_0402
2,3,4 GPIO20_5V0_HDMI_EN
GND
R218 100K_1%_0402
IN
EN
GND
OUT
OC
267-B2209-0000F
MINMUM 200MA
FOR HDMI TO VGA
DONGLE

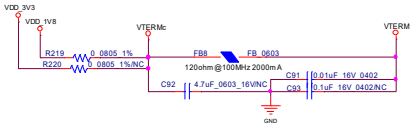
VDD_3V3
VDD_1V8
VTERMc
VTERM
R219 0_0805_1%
R220 0_0805_1%/NC
FB8
FB_0603
120ohm@100MHz 2000mA
C92 4.7uF_0603_16V/NC
C91 0.01uF_16V_0402
C93 0.1uF_16V_0402/NC
GND

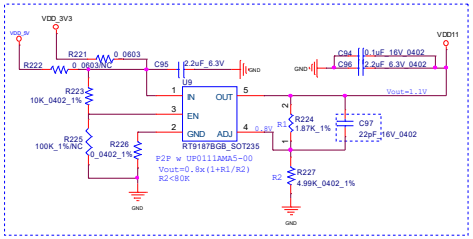
VDD_3V3
VDD_3V
R221 0_0603
R222 0_0603/NC
C95 2.2uF_6.3V
GND
C94 0.1uF_16V_0402
C96 2.2uF_6.3V_0402
VDD11
U9
IN
OUT
EN
GND
ADJ
RT9187BGB_SOT235
Vout=1.1V
R223
10K_0402_1%
R225
100K_1%/NC
R226
0_0402_1%
P2P w UP0111AMA5-00
Vout=0.8x(1+R1/R2)
R2<80K
R224
1.87K_1%
C97
22pF_16V_0402
R227
4.99K_0402_1%
GND

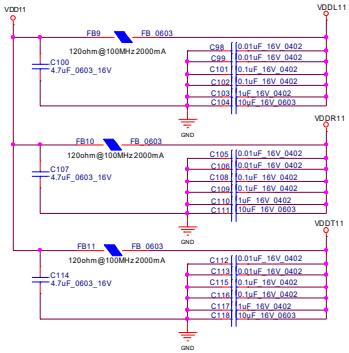
VDD11
VDDL11
FB9
FB_0603
120ohm@100MHz 2000mA
C100
4.7uF_0603_16V
C98 0.01uF_16V_0402
C99 0.01uF_16V_0402
C101 0.1uF_16V_0402
C102 0.1uF_16V_0402
C103 1uF_16V_0402
C104 10uF_16V_0603
GND
VDDR11
FB10
FB_0603
120ohm@100MHz 2000mA
C107
4.7uF_0603_16V
C105 0.01uF_16V_0402
C106 0.01uF_16V_0402
C108 0.1uF_16V_0402
C109 0.1uF_16V_0402
C110 1uF_16V_0402
C111 10uF_16V_0603
GND
VDDT11
FB11
FB_0603
120ohm@100MHz 2000mA
C114
4.7uF_0603_16V
C112 0.01uF_16V_0402
C113 0.01uF_16V_0402
C115 0.1uF_16V_0402
C116 0.1uF_16V_0402
C117 1uF_16V_0402
C118 10uF_16V_0603
GND