ISSUE	REVISION	DATE:	MADE BY	APPROVED BY
1.0	FOR PRODUCTION	2022.06.11	WANGJUNFENG	

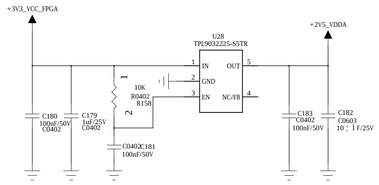

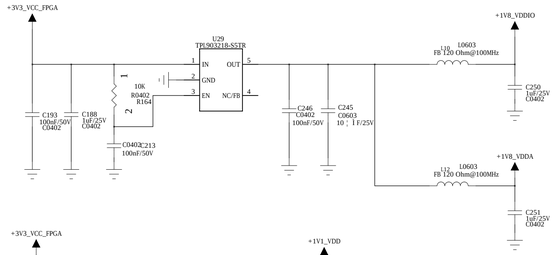

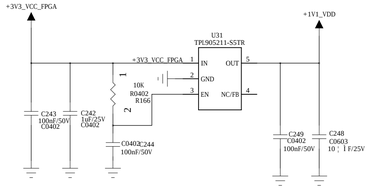

3 RGMII/SGMII to Copper

PIN	PIN_NAME	STRAP NAME	DEFAULT	ANEG_DIS	ANEGSEL_1	ANEGSEL_0	FUNCTIONAL
47	LED_0	ANEG_DIS	0	0	0	0	Auto-negotiation, 1000/100/10 advertised, Auto MDI-X
				0	0	1	Auto-negotiation, 1000/100advertised, Auto MDI-X
46	LED_1	ANEGSEL_0	0	0	1	0	Auto-negotiation, 100/10 advertised,Auto-MDI-X
				0	1	1	NA
				0	1	0	NA
45	LED_2	ANEGSEL_1	0	1	0	1	NA
				1	1	0	Forced 100M, full duplex, MDI
				1	1	1	Forced 100M, full duplex, MDI-X
38	RC_CTRL	MIRROR_EN	0	0			Port Mirroring Disabled
				1			Port Mirroring Enabled

1 PHY Address £ º 0000

PIN	PIN_NAME	STRAP NAME	DEFAULT			
					PHY_ADD1	PHY_ADD0
33	RX_D0	PHY_ADD[1:0]	00	MODE 0	0	0
				MODE 0	0	1
				MODE 0	1	0
				MODE 0	1	1
					PHY_ADD3	PHY_ADD2
34	RX_D1	PHY_ADD[3:2]	00	MODE 0	0	0
				MODE 0	1	0
				MODE 0	0	1
				MODE 0	1	1

4 Configurable clock skew

	Configurable clock skew	
	Aligned mode	Shift mode
GTX_CLK RX_CLK	Register :RGMIICTL Address 32h	Register :RGMIIDCTL Address 86h

2 OP_MODE:000

PIN	PIN_NAME	STRAP NAME	DEFAULT	OPMODE[2]	OPMODE[1]	OPMODE[0]	FUNCTIONAL
22	JTAG_TDO /GPIO_1	OPMODE[0]	0	0	0	0	RGMII to Copper(1000Base-T /100Base-TX/10Base-Te)
				0	0	1	RGMII to 1000Base-X
36	RX_D2	OPMODE[1]	0	0	1	0	RGMII to 100Base-FX
				0	1	1	RGMII-SGMII Bridge Mode
35	RX_D3	OPMODE[2]	0	1	0	0	1000Base-T to 1000Base-X
				1	0	1	100Base-TX to 100Base-FX
				1	1	0	SGMII to Copper
				1	1	1	JTAG for boundary scan

also ,when OP_mode[2.0]=000 LED Defaults: RGMII to Copper LED0 :10/100/1G LINK -UP LED1 : 1GLINK-UP LED2 :TX AND RX Activity . LEDS_CFG2 Register : bit 2 bit6 bit10 are LED_0_POLARITYS , NON STRAP Default active high

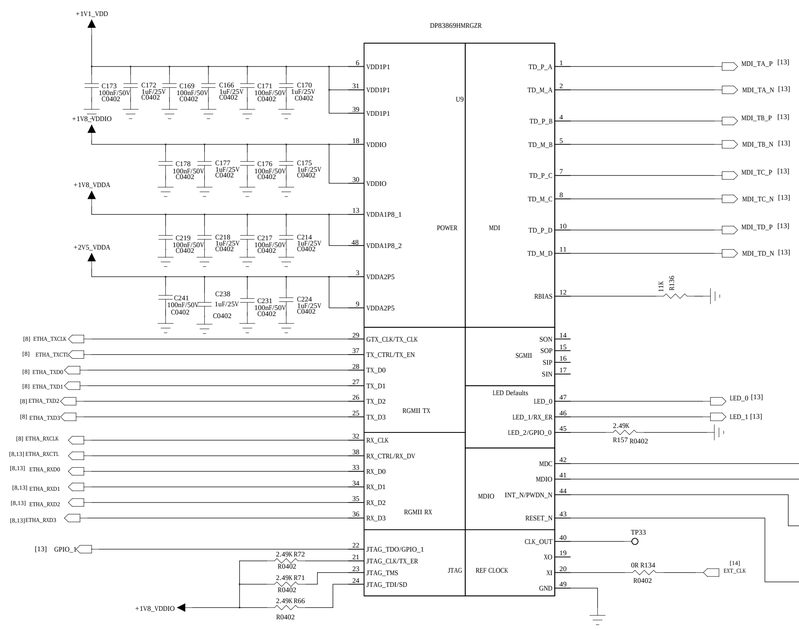

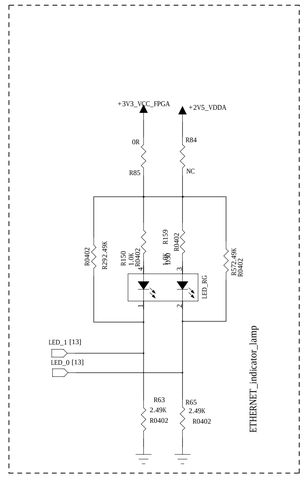

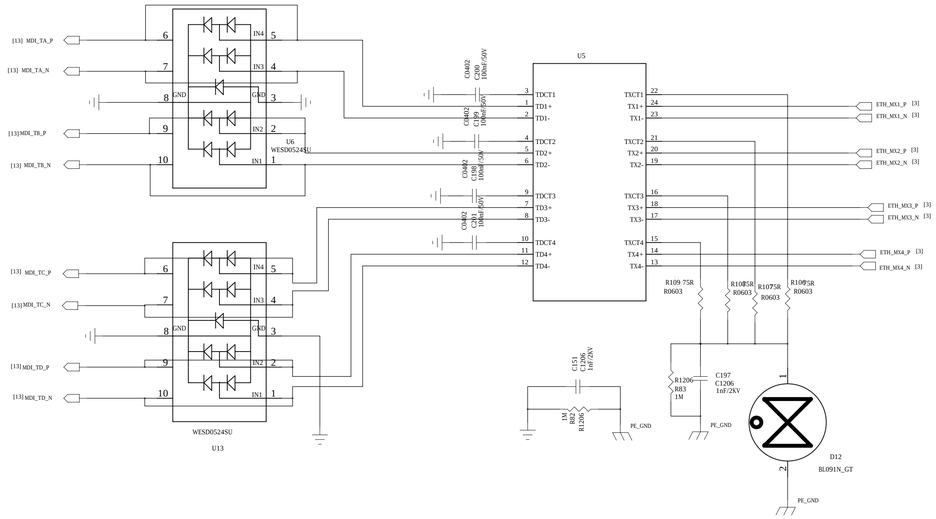

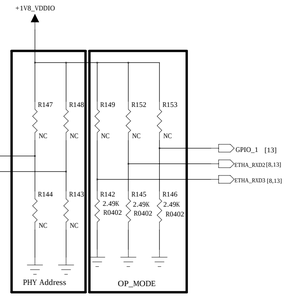

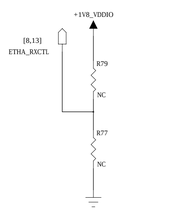

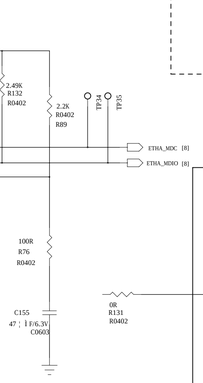

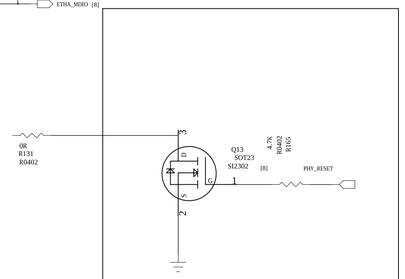

Hardware Reset control by FPGA

NOTE

Magnetics SELECT

TI is recommended HX5008FNL,it is too high ,so selsect HX5149NL-10,
HX5149NL-10 only the insertloss is bader than HX5008FNL 0.2db at 100MHZ ,but crosstalk is better hx5008FNL ,
Other spec. similar to each other

TITLE	MAIN BOARD SCHEMATIC DIARGAM		
DOC NO.	XXXX	DIVISION	LCD PDD
MODEL NO.	XXXX	DRAWN	WJF
CAD REF.	N/A	CHKD	XXXX
PAGE	19 OF 21	APPD.	XXXX

PHOSKEY