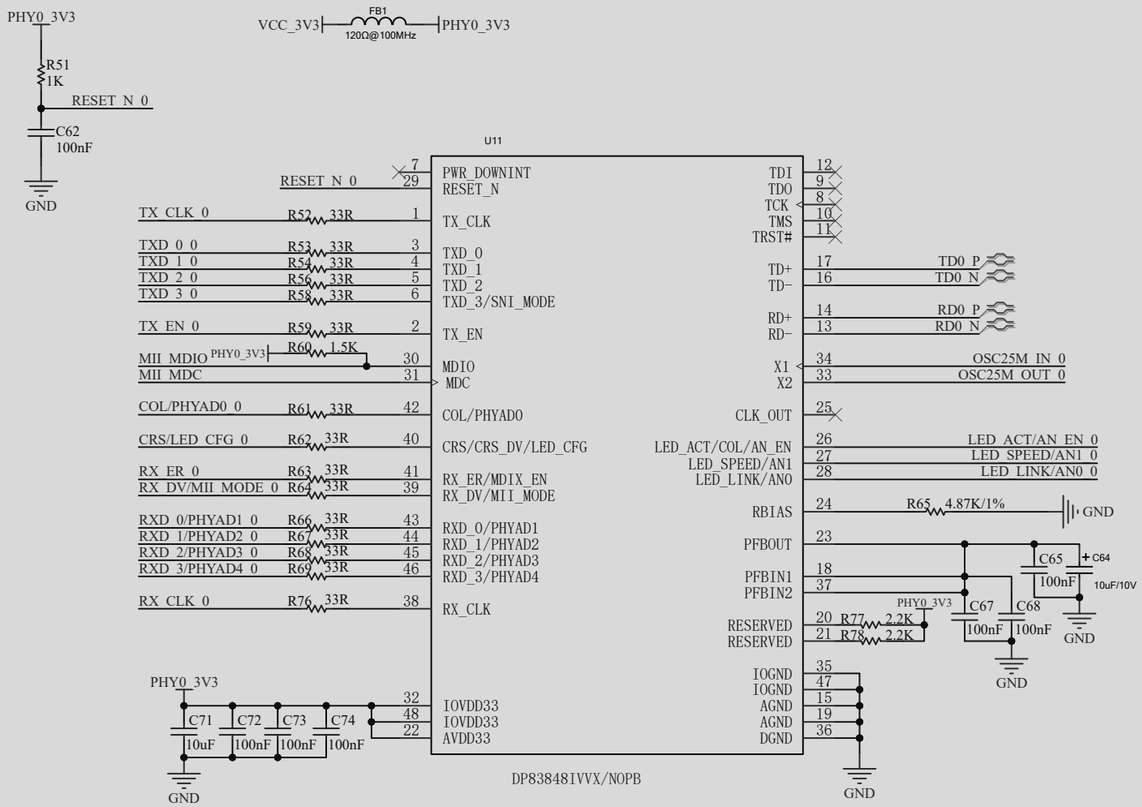

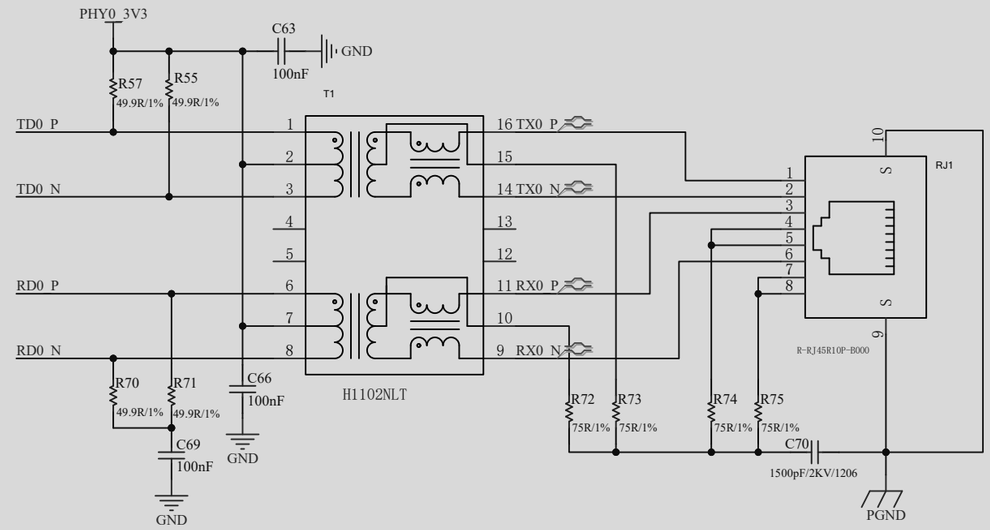

1、Place the 49.9R/1% resistors and 0.1-μF decoupling capacitor near the PHYTER TD± and RD± pins.
2、The center tap is pulled to the VDD position, and the capacitor is close to the center tap of the transformer.

MAC Interface Mode SELECT:

MII_MODE	SNI_MODE	MAC Interface Mode
0	X	MII Mode
1	0	RMII Mode
1	1	10 Mb SNI Mode

MAC Interface Mode:MII Mode

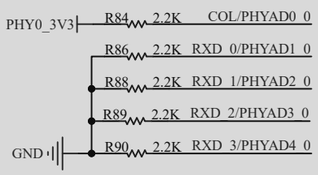

Address :000001 (0x01h)

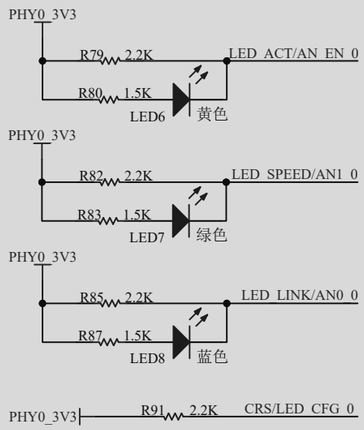

Auto-Negotiation Straps:

AN0	AN1	AN_EN	Description		
0	0	0	10Mbs	HD	Force
1	0	0	10Mbs	FD	Force
0	1	0	100Mbs	HD	Force
1	1	0	100Mbs	FD	Force
0	0	1	10Mbs	H/FD	Advertised
1	0	1	100Mbs	H/FD	Advertised
0	1	1	10/100Mbs	HD	Advertised
1	1	1	10/100Mbs	H/FD	Advertised(default)

LED Mode Selection:

Mode	LED_CFG[1]	LED_CFG[0](PIN 40)	LED_LINK	LED_SPEED	LED_ACT/LED_COL
1	X	1	ON for Good Link OFF for No Link	ON in 100 Mb/s OFF in 10 Mb/s	ON for Activity OFF for No Activity
2	0	0	ON for Good Link BLINK for Activity	ON in 100 Mb/s OFF in 10 Mb/s	ON for Collision OFF for No Collision
3	1	0	ON for Good Link BLINK for Activity	ON in 100 Mb/s OFF in 10 Mb/s	ON for Full Duplex OFF for Half Duplex

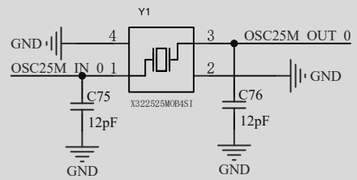

设计/日期		描述	Ethernet0				
审核/日期		产品名称	主控板	图纸编号			
标准化/日期		产品型号		页码	7/12	版本	S0.1
批准/日期		PCB型号					