3G SDI Out0 (Cable Driver)

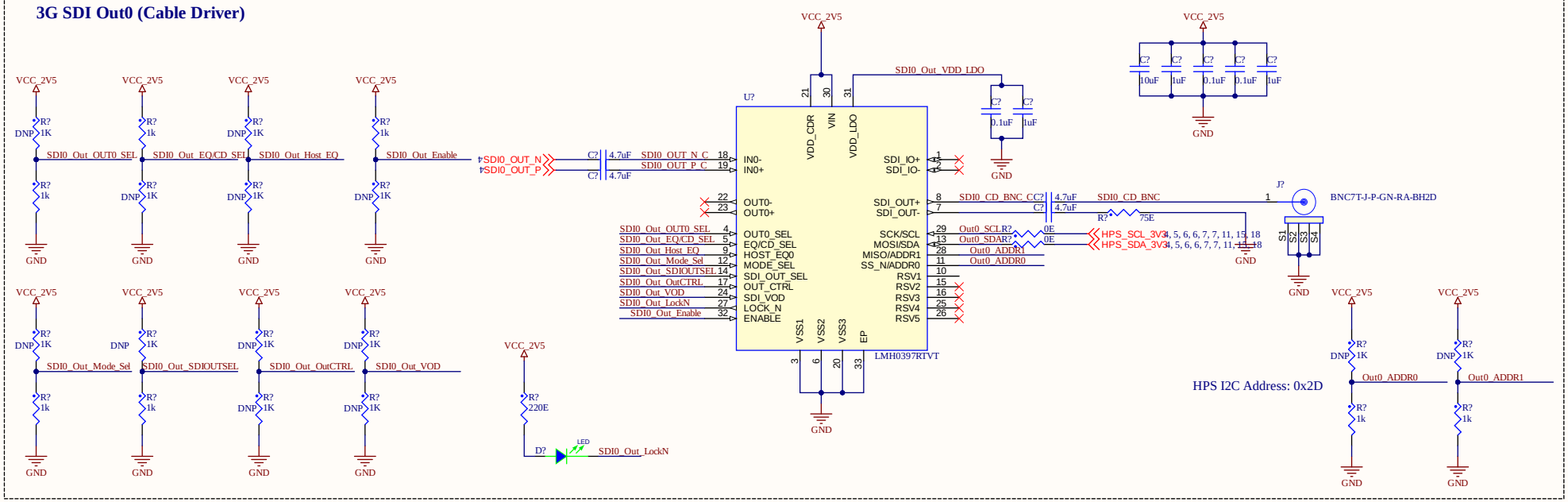
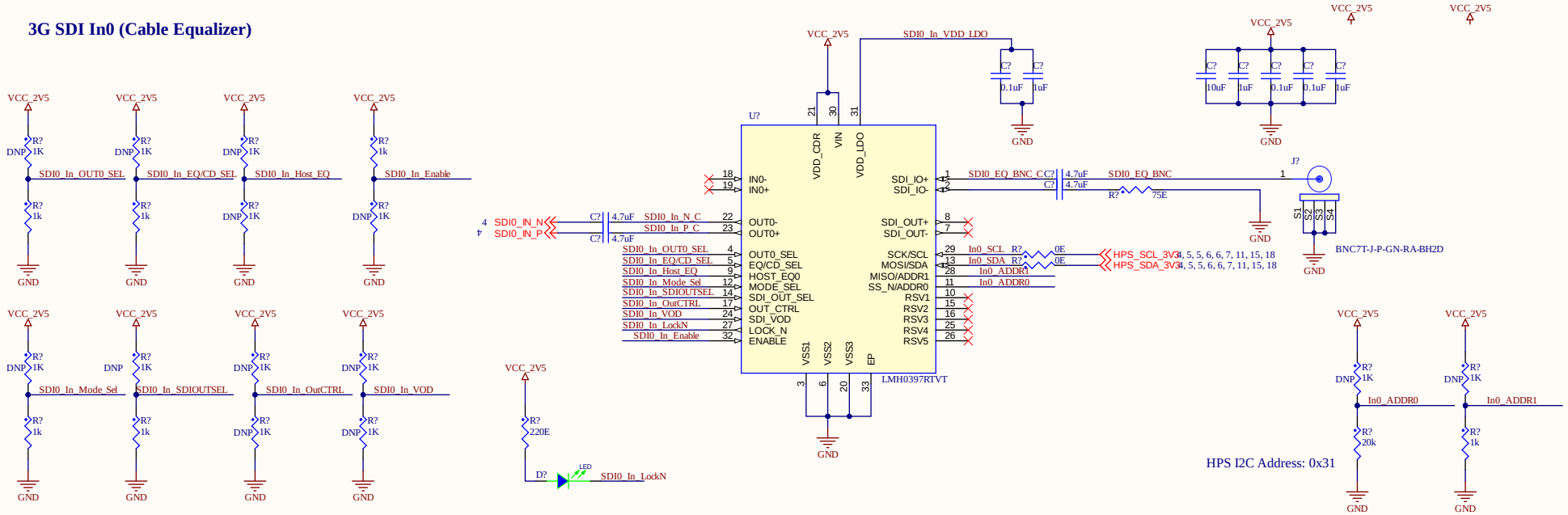
3G SDI In0 (Cable Equalizer)