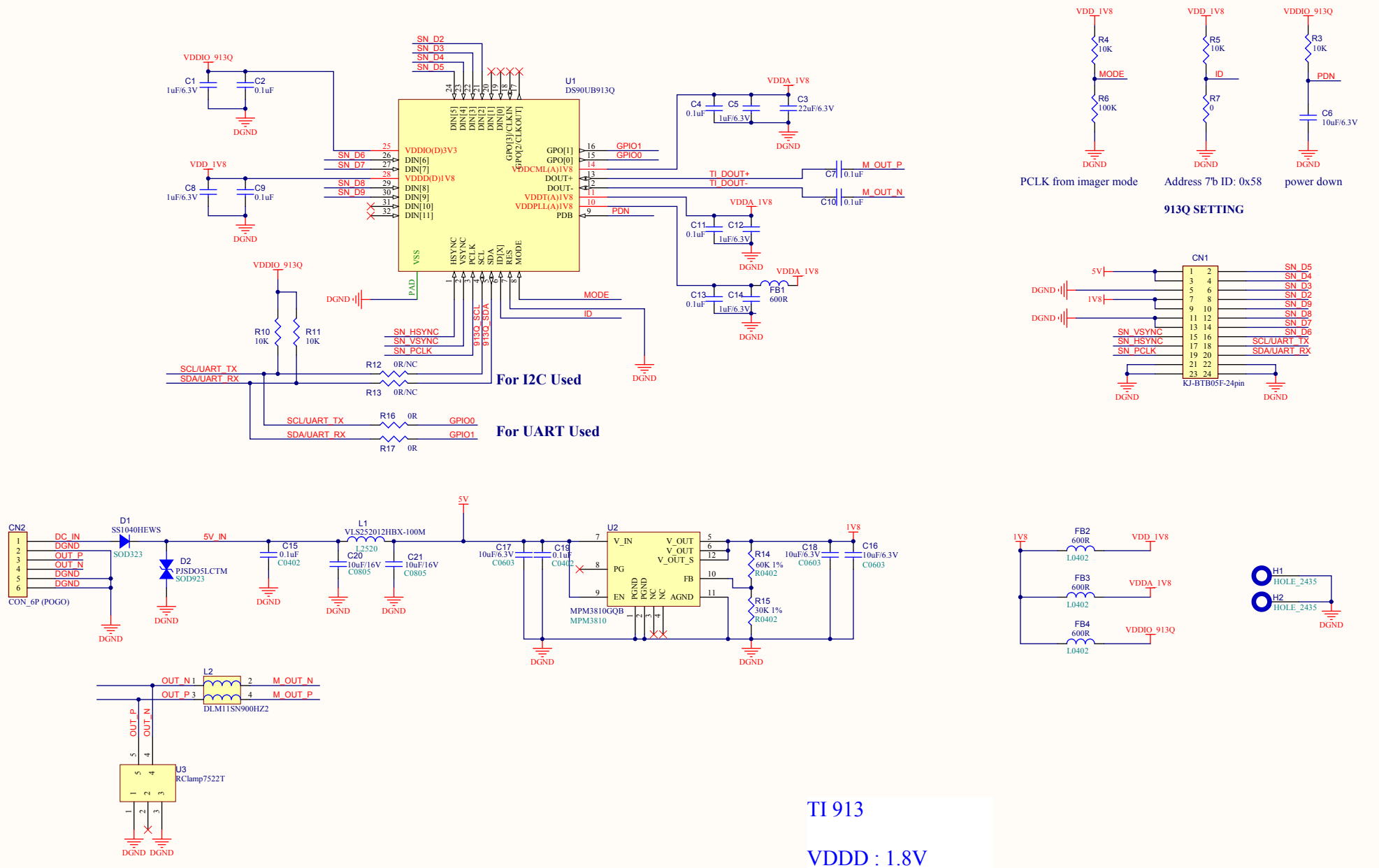
U1
DS90UB913Q
VDDIO_913Q
VDD_1V8
VDDA_1V8
DGND
SN_D2
SN_D3
SN_D4
SN_D5
SN_D6
SN_D7
SN_D8
SN_D9
GPIO1
GPIO0
TI_DOUT+
TI_DOUT-
M_OUT_P
M_OUT_N
PDN
MODE
ID
SN_HSYNC
SN_VSYNC
SN_PCLK
913Q_SCL
913Q_SDA
SCL/UART_TX
SDA/UART_RX
For I2C Used
For UART Used
R4 10K MODE R6 100K
R5 10K ID R7 0
R3 10K PDN C6 10uF/6.3V
PCLK from imager mode
Address 7'b ID: 0x58
power down
913Q SETTING
CN1
KJ-BTB05F-24pin
CN2
CON_6P (POGO)
D1 SS1040HEWS SOD323
D2 PJSDO5LCTM SOD923
L1 VLS252012HBX-100M
L2520
U2
MPM3810GQB
MPM3810
R14 60K 1% R0402
R15 30K 1% R0402
FB2 600R L0402
FB3 600R L0402
FB4 600R L0402
H1 HOLE_2435
H2 HOLE_2435
L2 DLM11SN900HZ2
U3 RClamp7522T
TI 913
VDDD : 1.8V
VDDA : 1.8V
VDDIO : 1.8V
Title
Size A3
Number
Revision
Date: 2016/5/15
Sheet of
File: D:\Shihyau\..\CAH102_DSP_V2.0.SchDoc
Drawn By: