10_GPIO_EXPANDERS

(3,5,6,7,8,9,12,13,14,15,18,19,20,21,22,23,24,26,28,29,34,44) V_SYS_3V3

(2,3,5,6,7,12,13,15,19,20,22,23,26,31,34,38,40,44) V_SYS_1V8
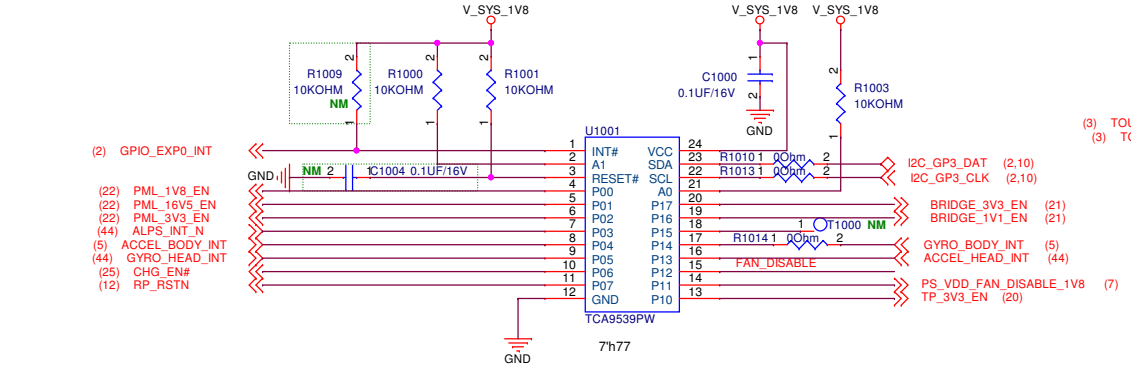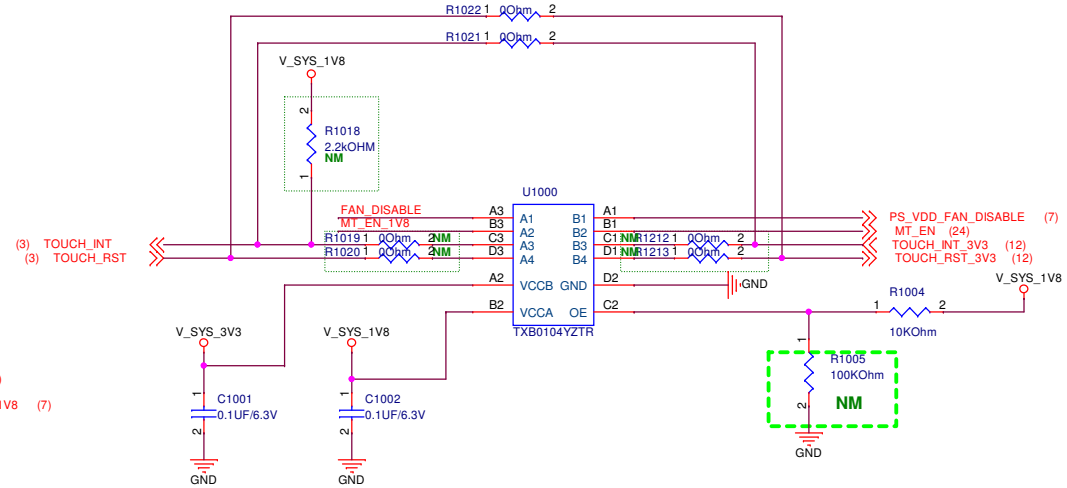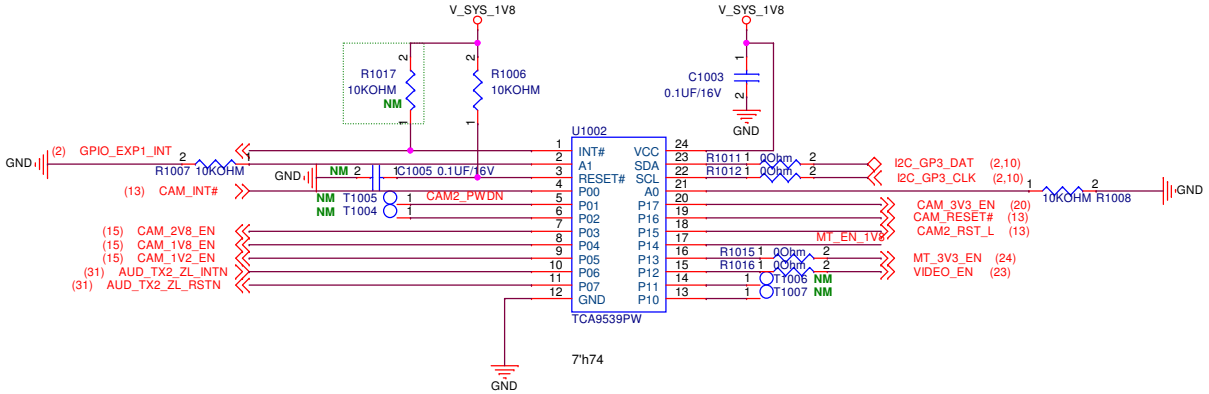
GPIO EXPANDERS