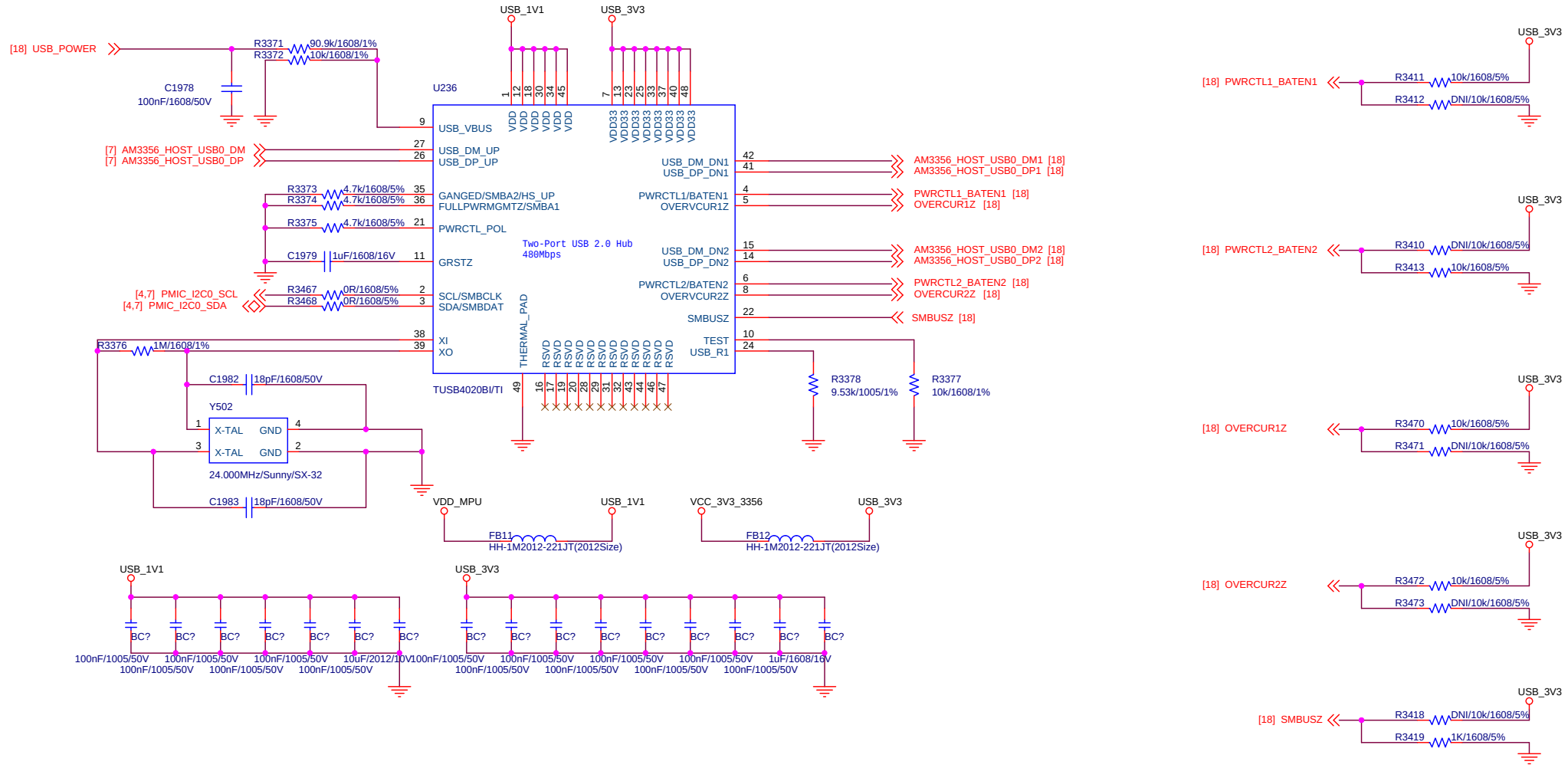

Title	<Title>	
Size B	Document Number <Doc>	Rev <RevCode>
Date: Thursday, December 21, 2017	Sheet 1 of 1	