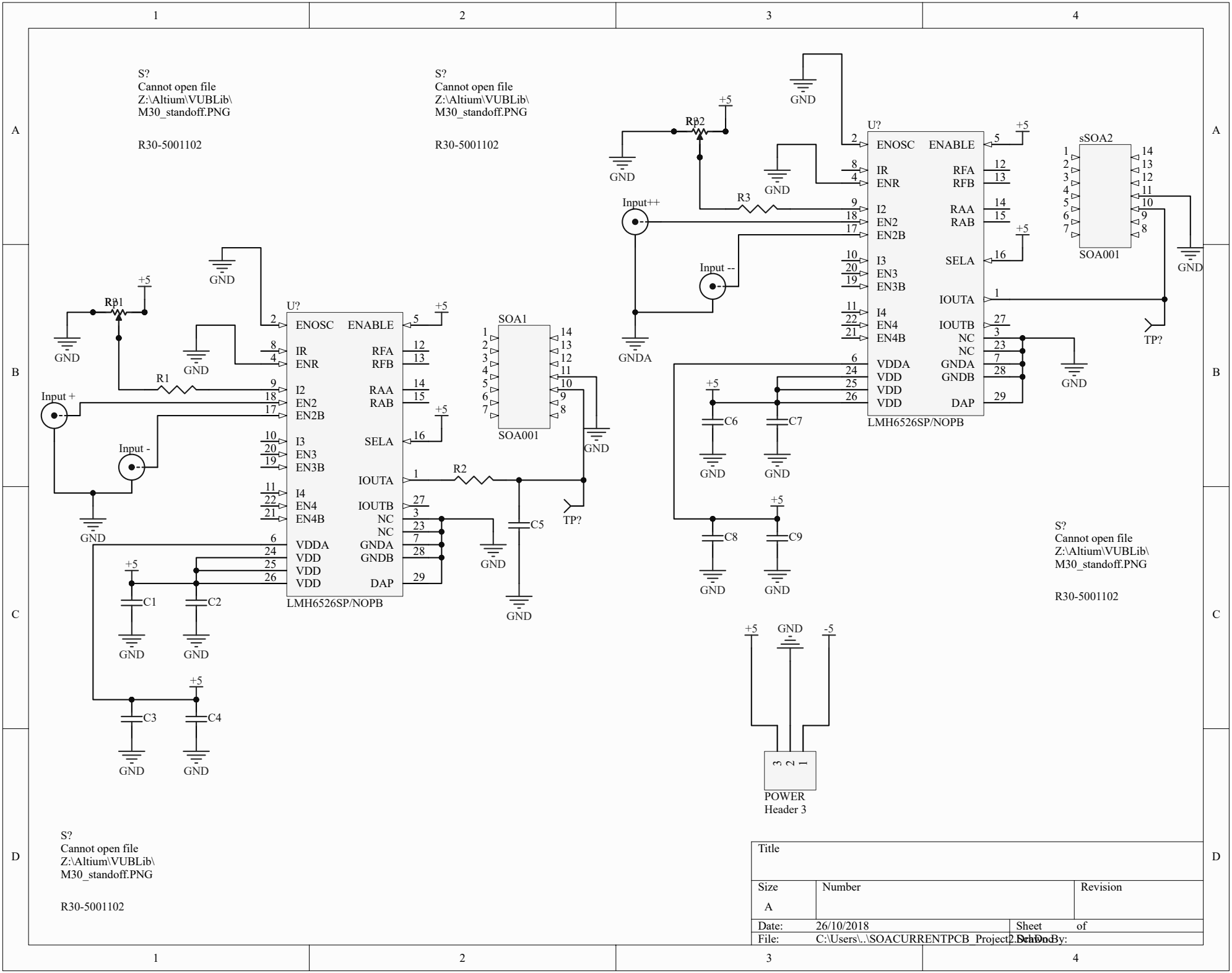
S?
Cannot open file
Z:\Altium\VUBLib\
M30_standoff.PNG
R30-5001102
S?
Cannot open file
Z:\Altium\VUBLib\
M30_standoff.PNG
R30-5001102
Rp1
Rp2
U?
ENOSC
ENABLE
IR
ENR
RFA
RFB
I2
EN2
EN2B
RAA
RAB
I3
EN3
EN3B
SELA
IOUTA
I4
EN4
EN4B
IOUTB
NC
NC
VDDA
VDD
VDD
VDD
GNDA
GNDB
DAP
LMH6526SP/NOPB
SOA1
SOA001
sSOA2
SOA001
Input +
Input -
Input++
Input --
GNDA
R1
R2
R3
C1
C2
C3
C4
C5
C6
C7
C8
C9
TP?
TP?
GND
+5
-5
POWER
Header 3
S?
Cannot open file
Z:\Altium\VUBLib\
M30_standoff.PNG
R30-5001102
S?
Cannot open file
Z:\Altium\VUBLib\
M30_standoff.PNG
R30-5001102
Title
Size
A
Number
Revision
Date: 26/10/2018
Sheet of
File: C:\Users\..\SOACURRENTPCB_Project2.PcbDoc
Drawn By: