Port B PHY

STRAP SETTINGS

RX_CTRL must be strapped
Mode 4 = Autoneg Enable

SMI ADRS = 0011
MODE 4 ON RX_D0

MEDIA CONNECTIONS
100 OHM DIFF PAIRS

RGMII CONNECTIONS TO BRIDGE

THE TI PHY HAS INTERNAL TERMINATIONS

50PPM CRYSTAL

FROM MAC2

1V REGULATOR @ 350mA

1.8V @ 150mA

5900131200RevA

Garland Technology
Buffalo, NY / Richardson, TX

Title: P1GCCUA

Size: B | Document Number: 400-0131-100 | Rev: A

Date: Thursday, May 17, 2018 | Sheet 7 of 11

USB TO ETHERNET BRIDGE PORT 1

NOTE: FOR LAYOUT PURPOSES, TXDP AND TXDM CAN BE REVERSED. SAME FOR RXDP AND RXDM NOT THE DP/DM LINES
(BOTH P/M REVERSED FOR BETTER LAYOUT)
RX7801 <- TX8020
TX7801 -> RX8020

PLACE R'S NEAR 7801

RGMii TO PHY NOT USED

USB 3.0
KEEP CAPS CLOSE TO 7801

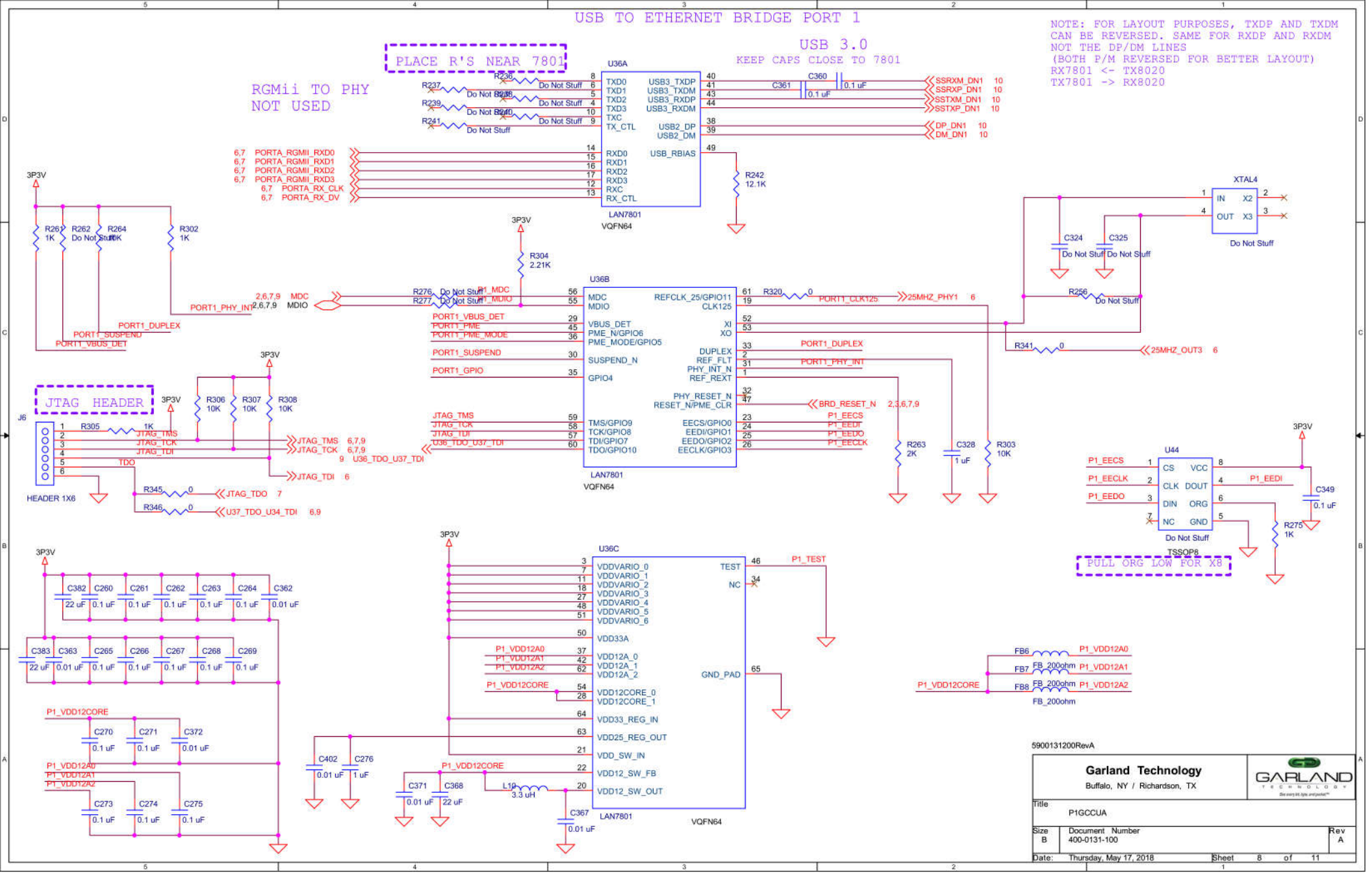

5900131200RevA

Garland Technology Buffalo, NY / Richardson, TX		GARLAND TECHNOLOGY
Title: P1GCCUA		
Size: B	Document Number: 400-0131-100	Rev: A
Date: Thursday, May 17, 2018	Sheet 8 of 11	