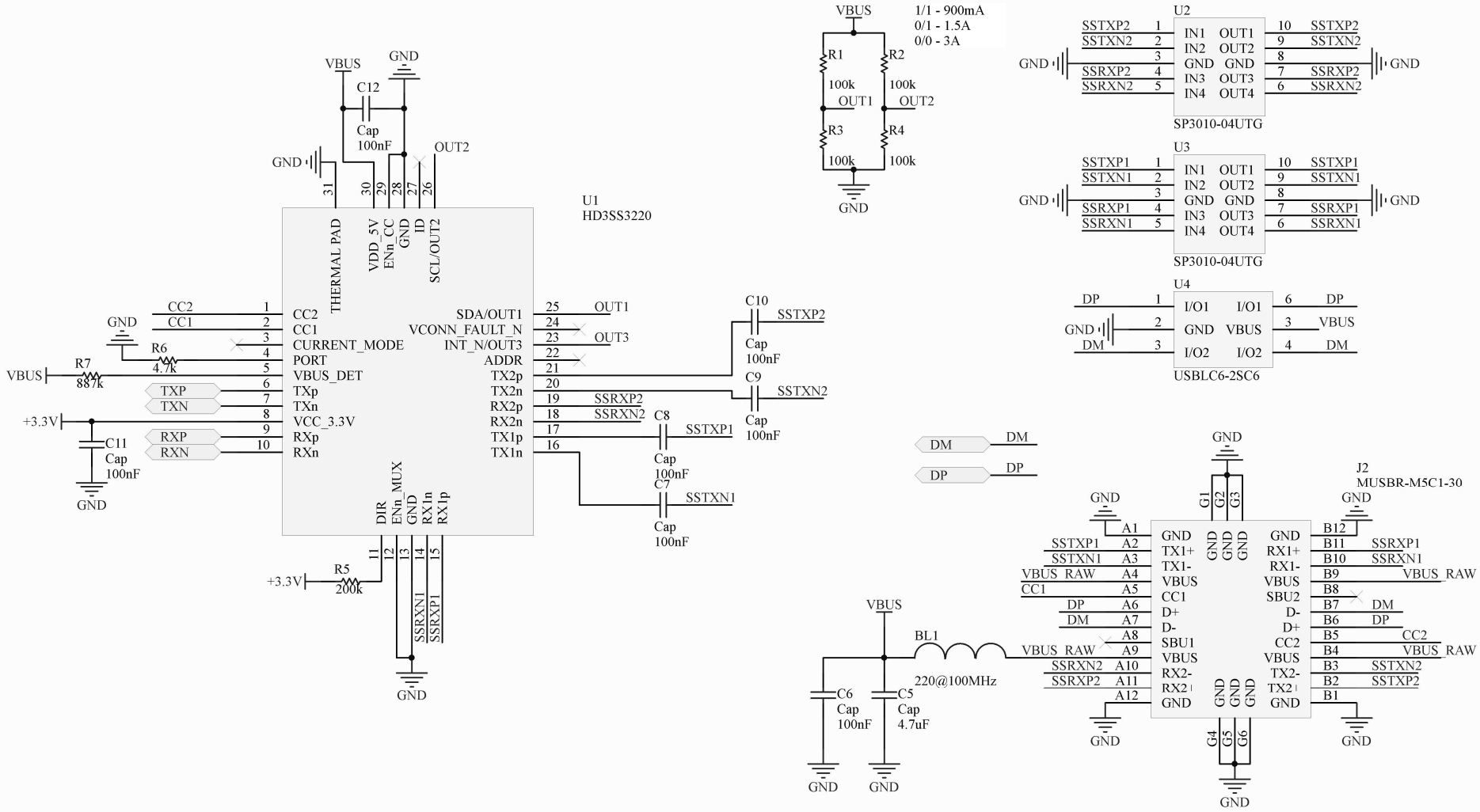


| Title | | |
|---|---|---|
| Size A4 | Number | Revision |
| Date: 19/10/2017 | | Sheet of |
| File: C:\Users\..\USBC_IF.SchDoc | | Drawn By: |