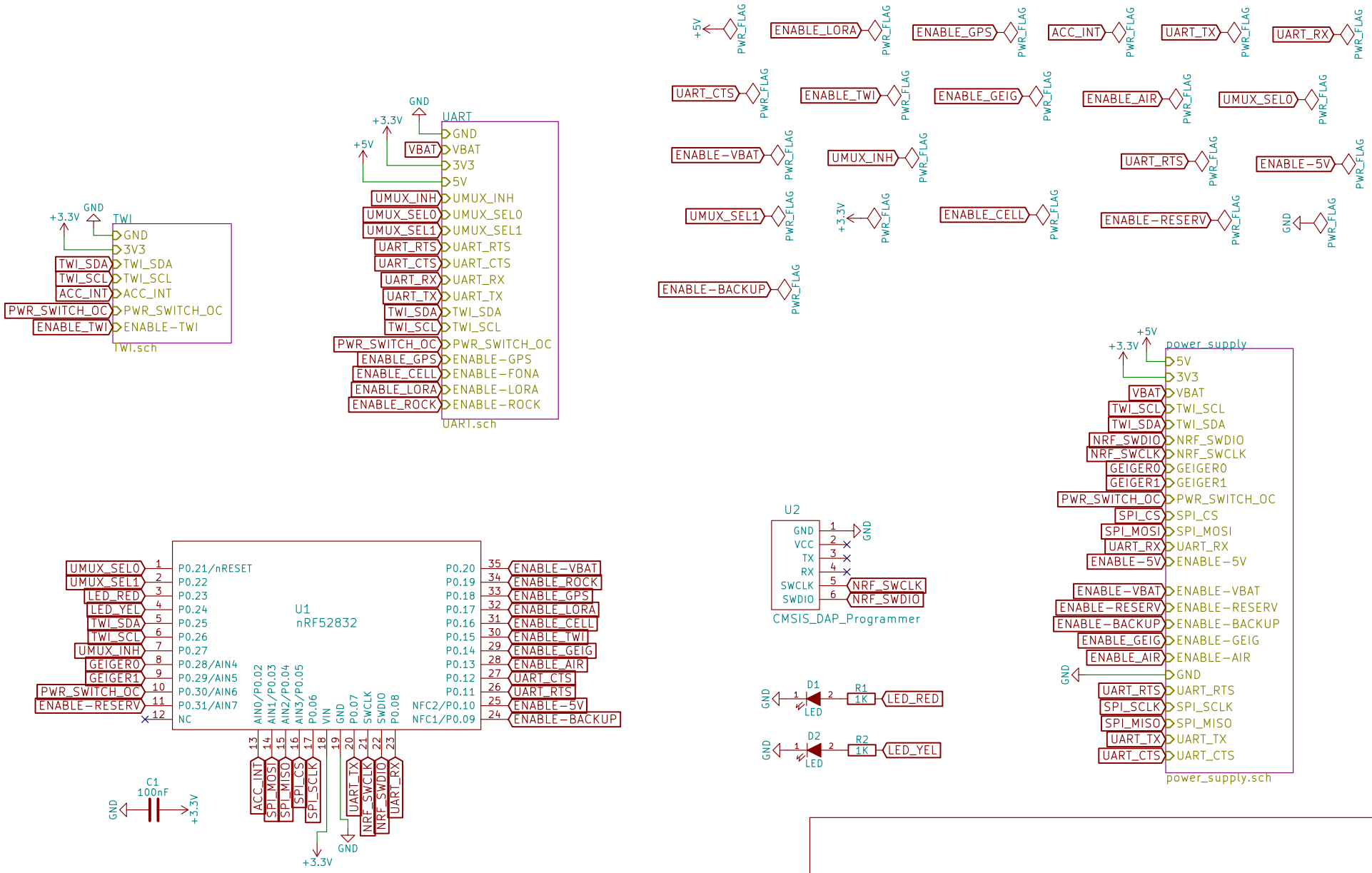

Institute IRNAS Rače

Sheet: /

File: communications-module.sch

Title: Solarcast Communications Module

Size: A4	Date: 2017-02-07	**Rev: 1.0**
KiCad E.D.A. kicad 4.0.0-rc1-stable		Id: 1/4

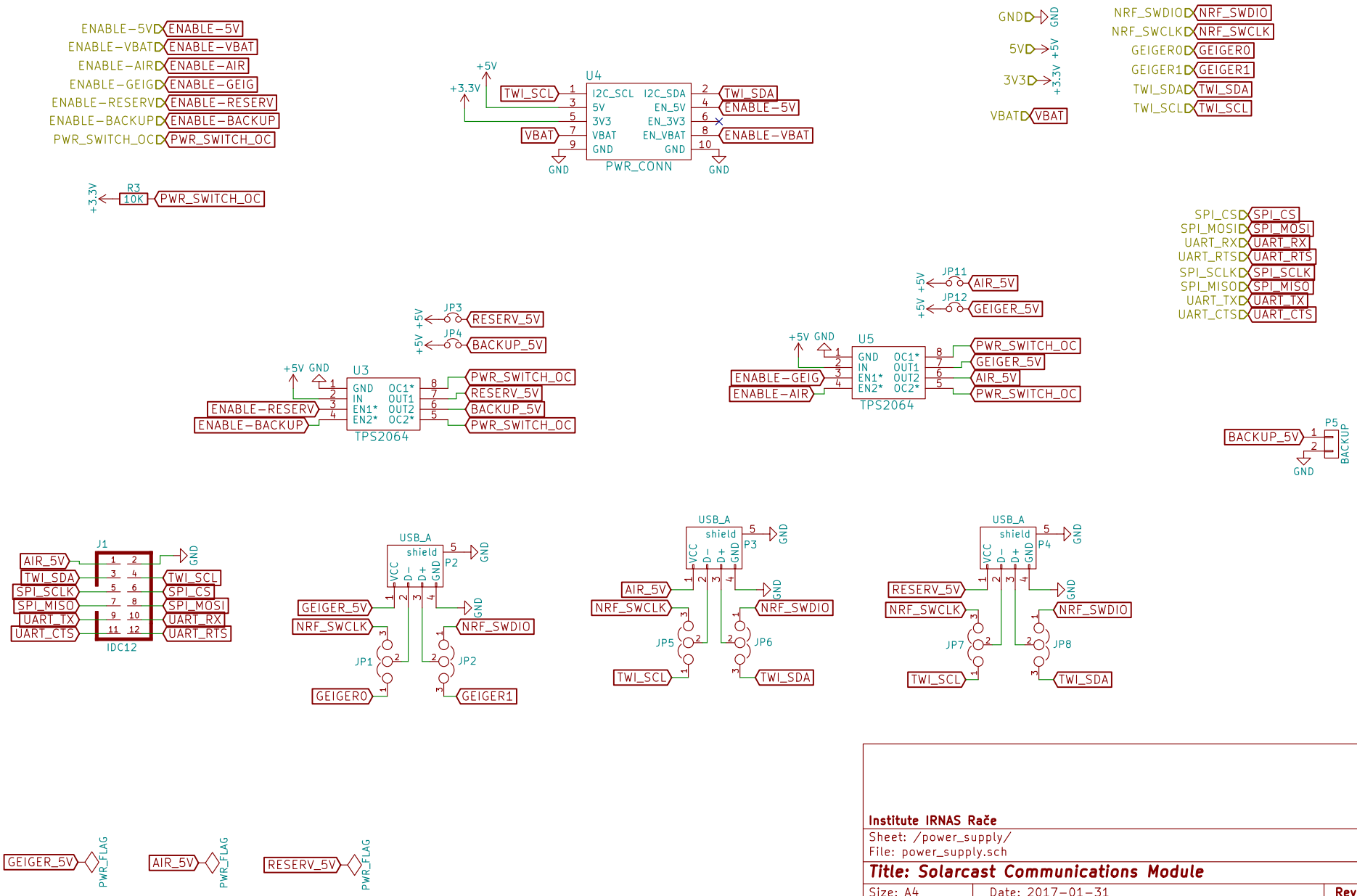

Institute IRNAS Rače

Sheet: /power_supply/
File: power_supply.sch

Title: Solarcast Communications Module

Size: A4	Date: 2017-01-31	Rev: 1.0
KiCad E.D.A. kicad 4.0.0-rc1-stable		Id: 2/4

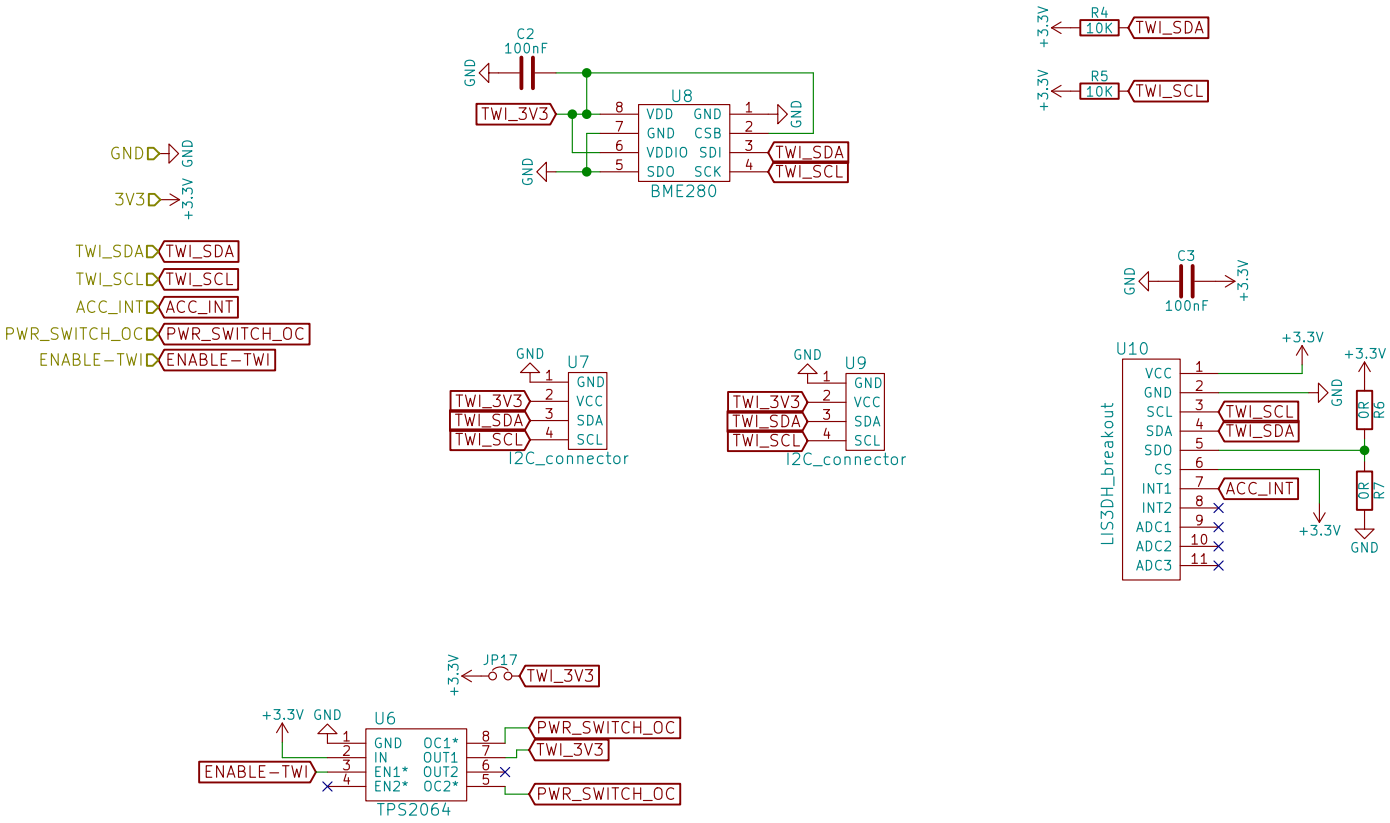

Sheet: /TWI/
File: TWI.sch

Title:

Size: A4	Date:	**Rev:**
KiCad E.D.A. kicad 4.0.0-rc1-stable		Id: 3/4

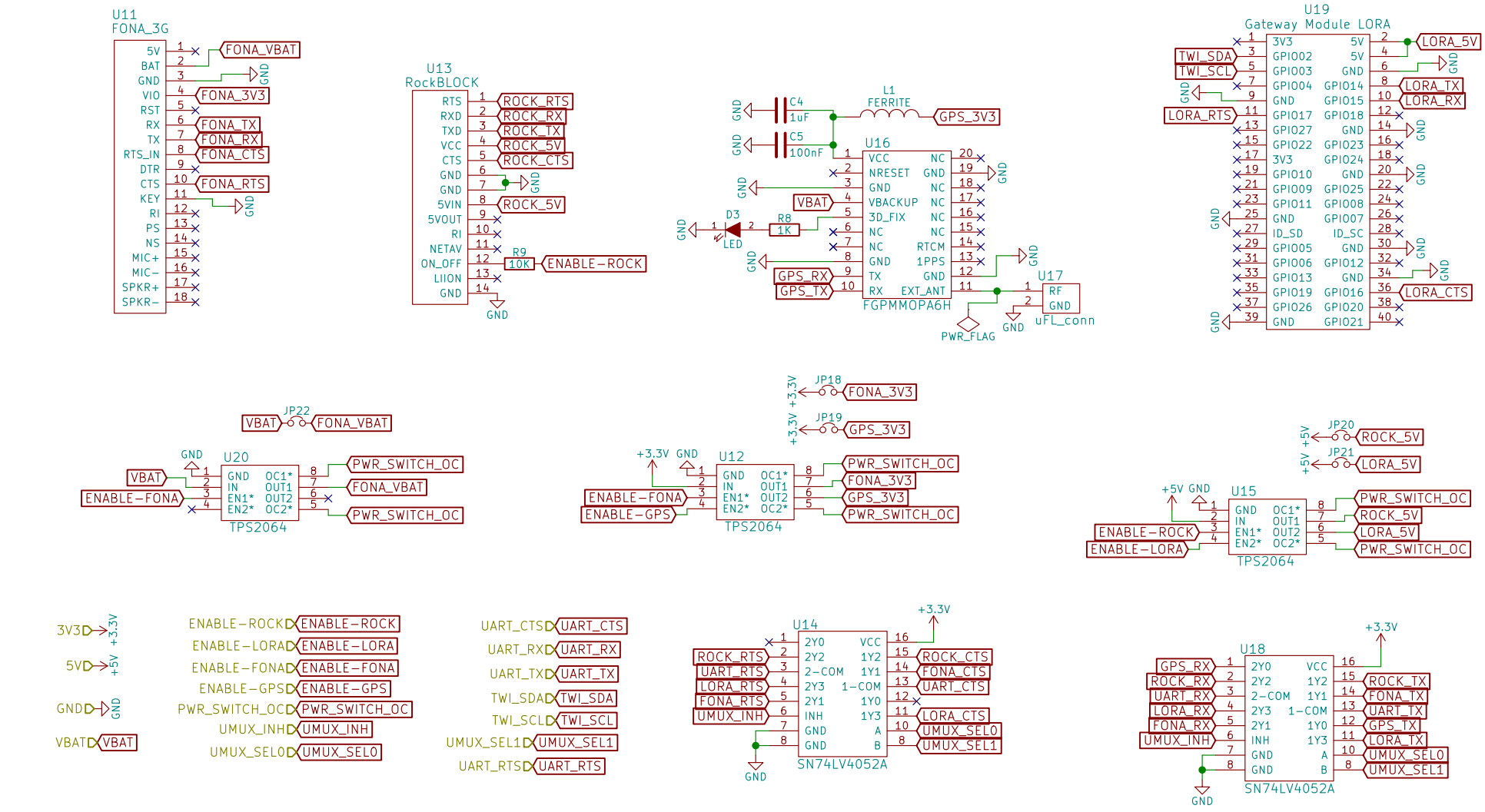

Sheet: /UART/
File: UART.sch

Title:

Size: A4	Date:	Rev:
KiCad E.D.A. kicad 4.0.0−rc1−stable		Id: 4/4