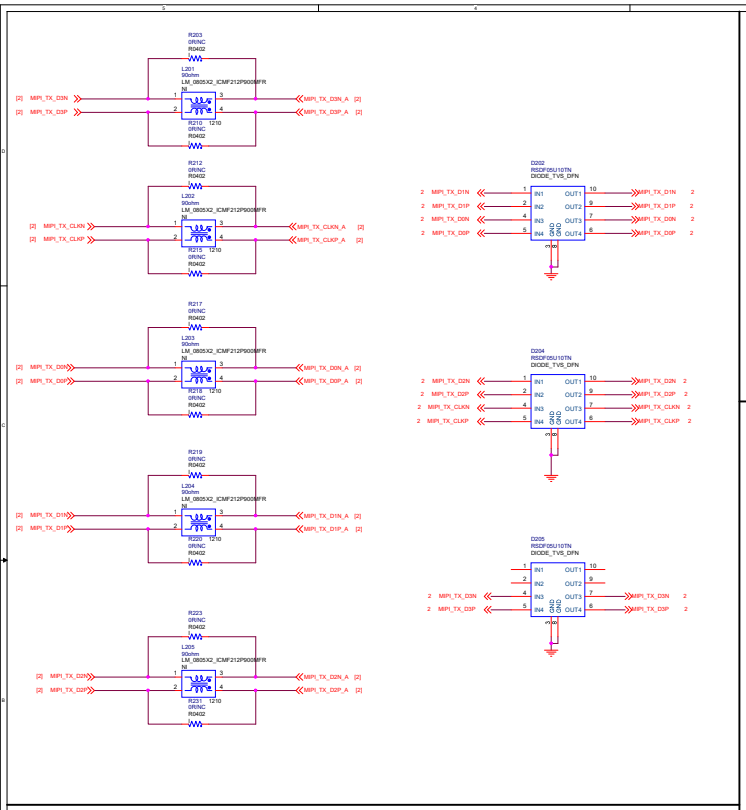

EDP LCD

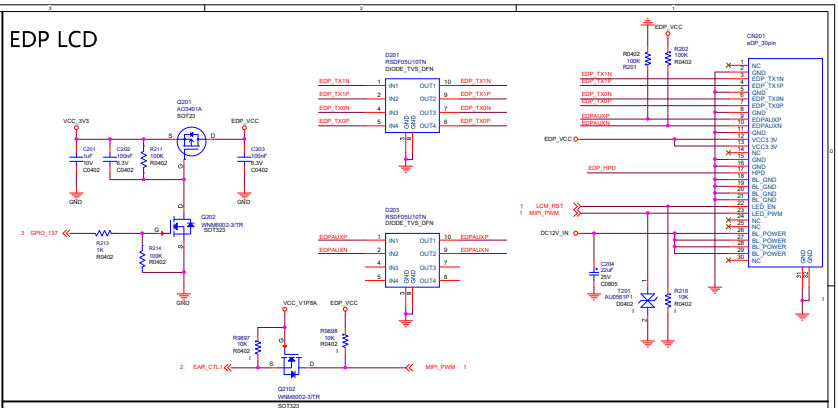

Mipi To EDP

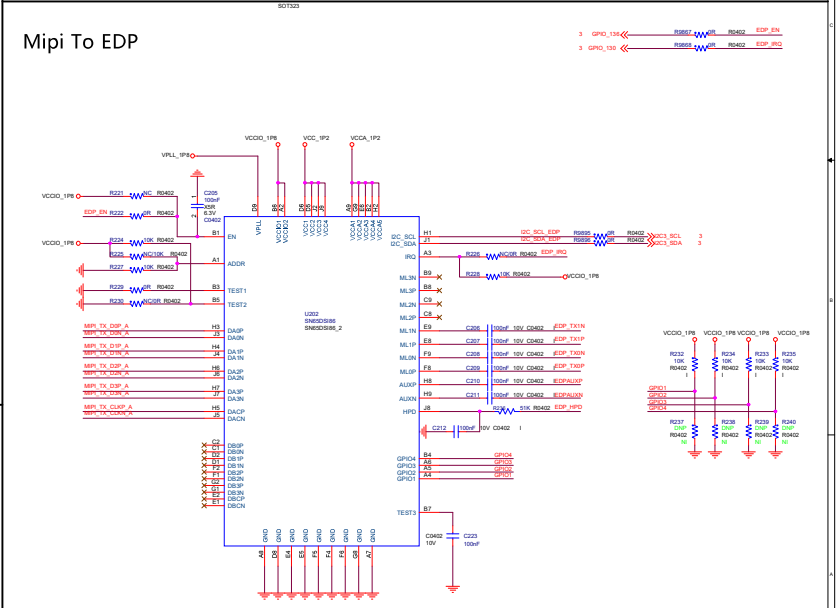

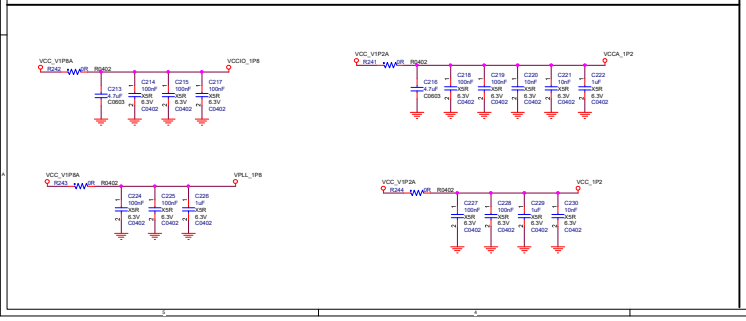

File	RK3288_Tablet		
Size A2	Document Number MIPI To EDP		Rev V0.1
Date: Wednesday, April 14, 2021		Sheet 2 of 3	