RMII Ethernet

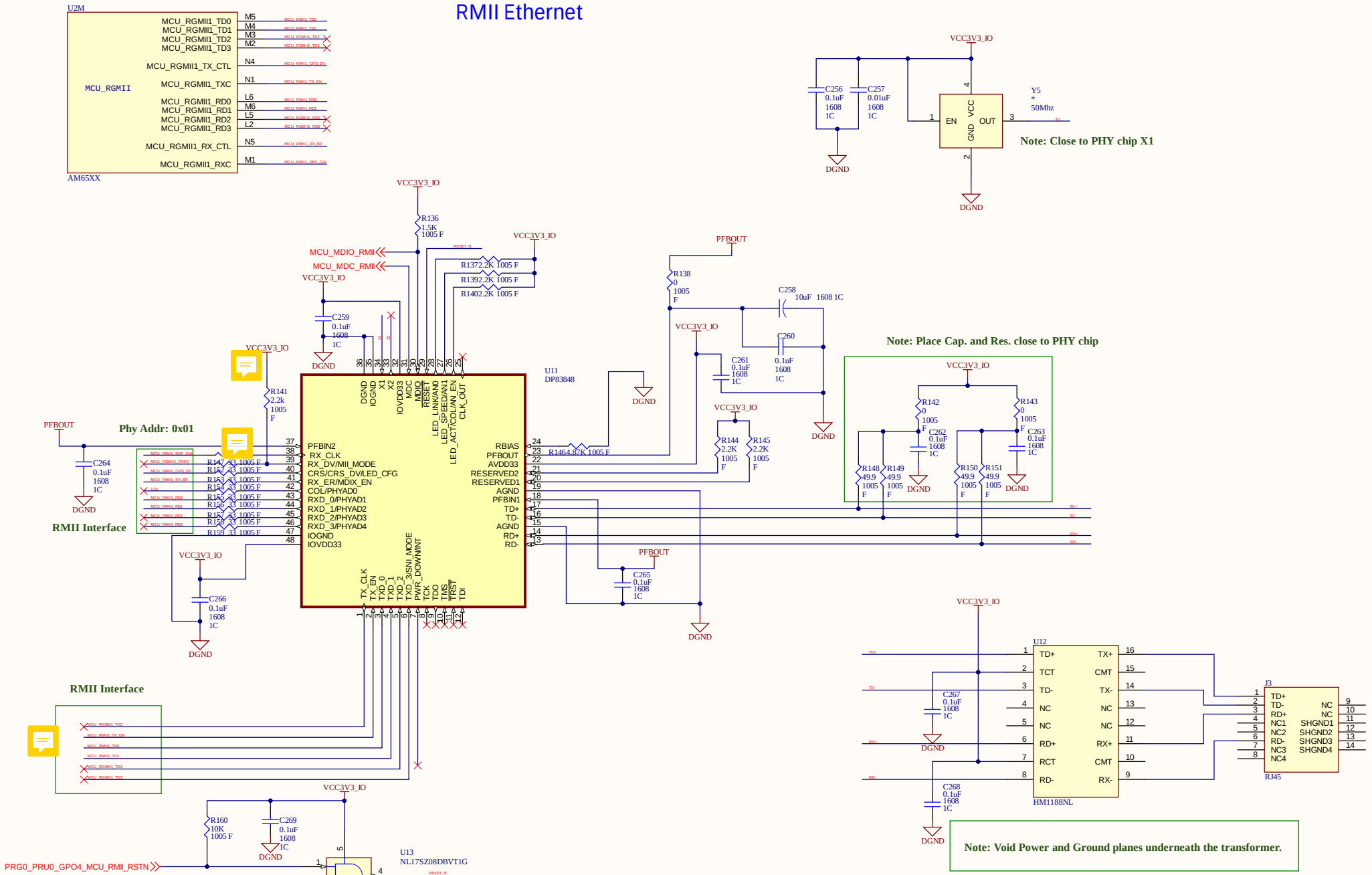

File: 11 Ethernet.SchDoc		
Size: A3	Memo:	Revision: *
Date: 2022-02-17 Time: 오후 5:51:05	Sheet 11 of 31	