料号：156

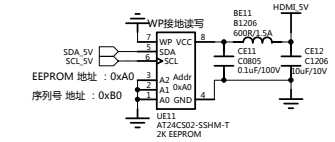

TCON时序参数存储器模块E1

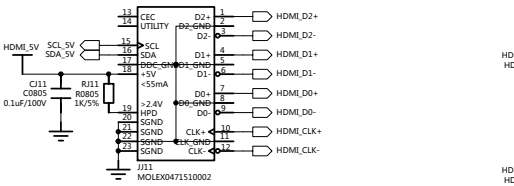

HDMI输入插座模块J1

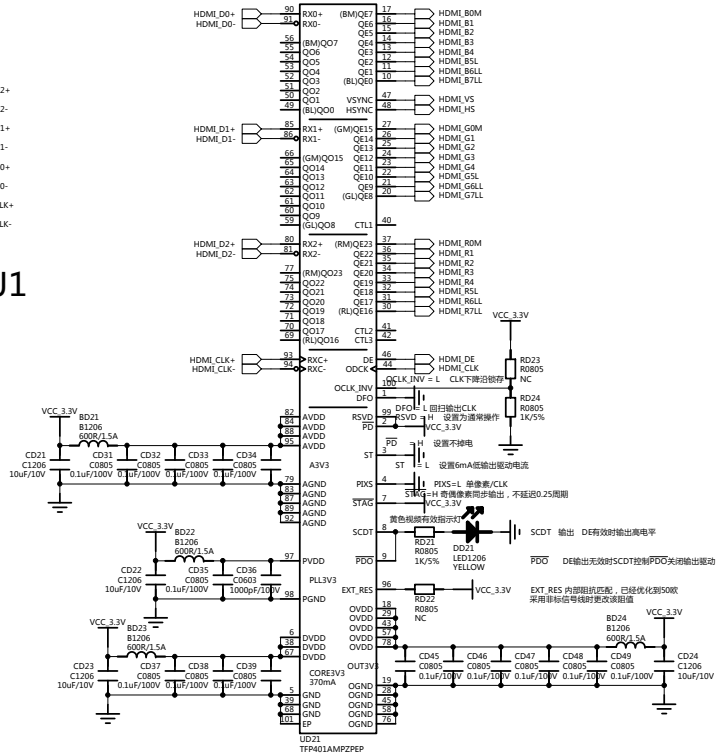

DVI解码模块D2-D4

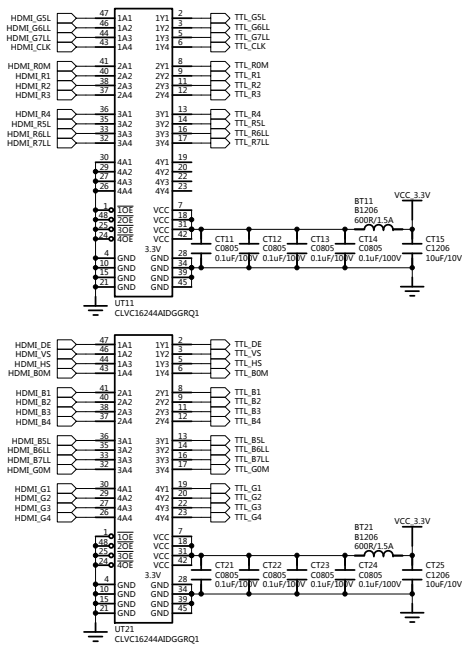

RGB编码模块T1-2

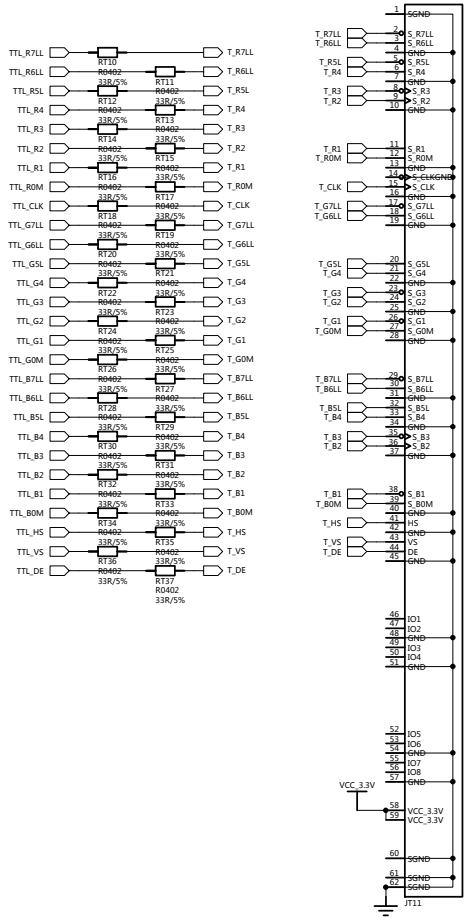

RGB插座JT11

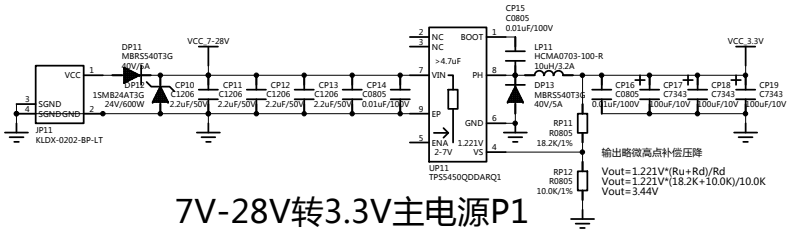

7V-28V转3.3V主电源P1

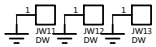

安装孔W1

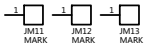

定位孔M1/M2

Rev	Description	Date
1	New Release	2015.11.20

TIAN-MA MICROELECTRONICS CO.

8F.,64th Building,Jinlong,Majialong Industrial Area,Nanshan District,Shenzhen,China

DRAWN BY: 吴韦建/2015-11-20	TITLE: DEMO_TEST DC4-1		
CHECKED BY: 李浩/2015-11-20	PURPOSE: FOR PCB		
APPROVED BY: 程松华/2015-11-20	UNIT: mm	SCALE:	SHEET NO: 1 OF 1