THIS DOCUMENT AND THE DATA DISCLOSED HEREIN OR HEREWITH IS THE PROPERTY OF ALTIUM LIMITED AND MAY BE FREELY DISTRIBUTED IN WHOLE. NO RIGHTS ARE RESERVED OR EXPRESS OR IMPLIED WARANTEE GIVEN.

REVISION	DESCRIPTION	DATE	APPROVED

This circuit has been configured to resemble the Duo Sink as closely as possible. GPIO 13-15 have been shorted in this ciruit but are grounded through 100k on the Duo Sink. VIN_3V3 on this circuit is presently connected to an unpowered LDO. The I2C addresses of this circuit are 0x20/0x38 unlike the Duo Sink. The Duo Sink's demo configuration binary (tps65987_power_duo_mode_SINK_evm_flash_image) is loaded on the flash.

This circuit powers up and negotiates power with the Duo Source, however the CC activity is different to what the Duo Sink. The PP_HV switches do not close on this circuit, but they do on the Duo Sink.

The controller responds to I2C probes from the adapter settings window and reports the expected 0xf7071090 firmware version. Flashing a new project with the customer use registers programmed, the controller responds with expected values. Both suggest the controller is active and responsive.

Creating a new project, TPS65987DDH -> Standard -> DRP prefers power source, and flashing the resultant binary allows the PP_HV switch to close, suggesting there is no short/fault on the PP_HV output.

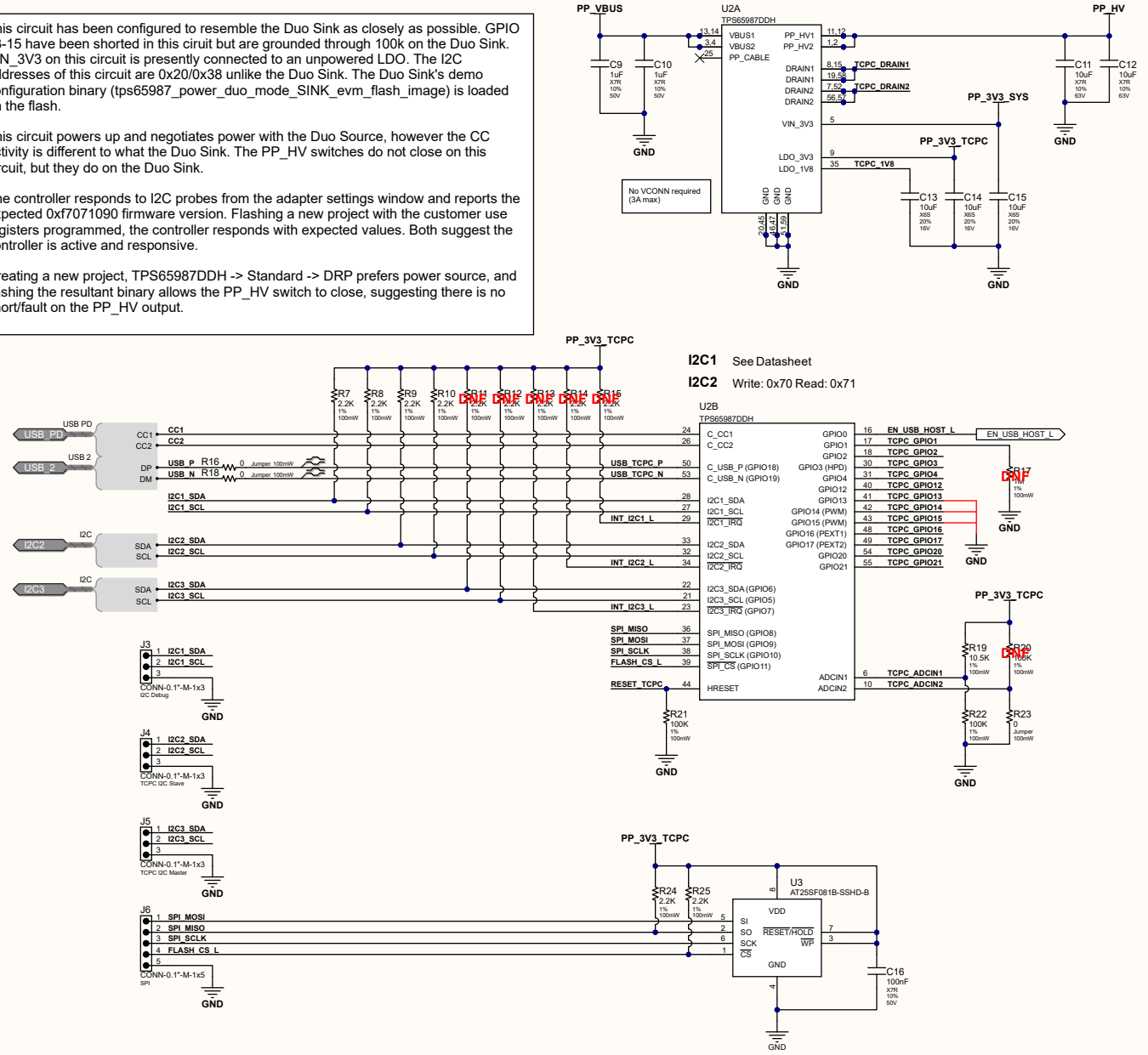

APPROVALS	DATE
ENG:	
DSN:	
CHK:	

REFERENCE DOCUMENTS

BOM:

ASSY DWG:

FAB DWG:

PCB DWG:

PROJECT: Altium

PROJECT REVISION: Not in version control

DOCUMENT REVISION: Not in version control

DESIGN ITEM: ItemRevision not interpreted

TITLE: USB PD Controller

SIZE: B

CAGE CODE

DWG NO.

REV: ItemRevisi

SCALE:

FILE NAME: USB PD Charger Prototype - USB PD Controller.SchDoc

SHEET 2 OF 4

DWG NO. ItemRevision not interpreted REV SHT