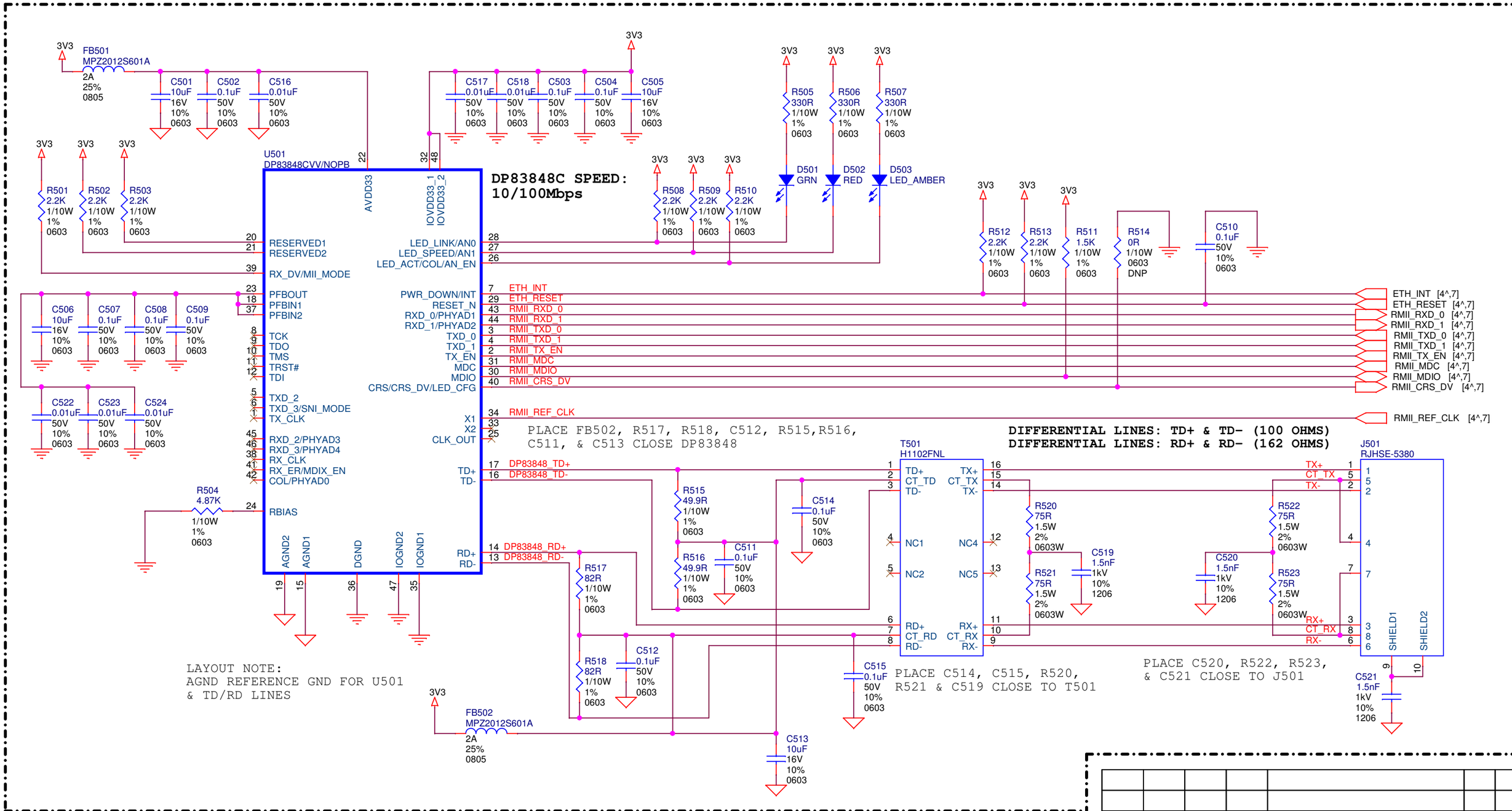
DP83848C SPEED:
10/100Mbps
U501
DP83848CVV/NOPB
FB501
MPZ2012S601A
2A
25%
0805
FB502
MPZ2012S601A
2A
25%
0805
3V3
C501 10uF 16V 10% 0603
C502 0.1uF 50V 10% 0603
C516 0.01uF 50V 10% 0603
C517 0.01uF 50V 10% 0603
C518 0.01uF 50V 10% 0603
C503 0.1uF 50V 10% 0603
C504 0.1uF 50V 10% 0603
C505 10uF 16V 10% 0603
R501 2.2K 1/10W 1% 0603
R502 2.2K 1/10W 1% 0603
R503 2.2K 1/10W 1% 0603
R508 2.2K 1/10W 1% 0603
R509 2.2K 1/10W 1% 0603
R510 2.2K 1/10W 1% 0603
R505 330R 1/10W 1% 0603
R506 330R 1/10W 1% 0603
R507 330R 1/10W 1% 0603
D501 GRN
D502 RED
D503 LED_AMBER
R512 2.2K 1/10W 1% 0603
R513 2.2K 1/10W 1% 0603
R511 1.5K 1/10W 1% 0603
R514 0R 1/10W 0603 DNP
C510 0.1uF 50V 10% 0603
C506 10uF 16V 10% 0603
C507 0.1uF 50V 10% 0603
C508 0.1uF 50V 10% 0603
C509 0.1uF 50V 10% 0603
C522 0.01uF 50V 10% 0603
C523 0.01uF 50V 10% 0603
C524 0.01uF 50V 10% 0603
R504 4.87K 1/10W 1% 0603
AVDD33
IOVDD33_1
IOVDD33_2
RESERVED1
RESERVED2
RX_DV/MII_MODE
PFBOUT
PFBIN1
PFBIN2
TCK
TDO
TMS
TRST#
TDI
TXD_2
TXD_3/SNI_MODE
TX_CLK
RXD_2/PHYAD3
RXD_3/PHYAD4
RX_CLK
RX_ER/MDIX_EN
COL/PHYAD0
RBIAS
AGND2
AGND1
DGND
IOGND2
IOGND1
LED_LINK/AN0
LED_SPEED/AN1
LED_ACT/COL/AN_EN
PWR_DOWN/INT
RESET_N
RXD_0/PHYAD1
RXD_1/PHYAD2
TXD_0
TXD_1
TX_EN
MDC
MDIO
CRS/CRS_DV/LED_CFG
X1
X2
CLK_OUT
TD+
TD-
RD+
RD-
ETH_INT
ETH_RESET
RMII_RXD_0
RMII_RXD_1
RMII_TXD_0
RMII_TXD_1
RMII_TX_EN
RMII_MDC
RMII_MDIO
RMII_CRS_DV
RMII_REF_CLK
DP83848_TD+
DP83848_TD-
DP83848_RD+
DP83848_RD-
PLACE FB502, R517, R518, C512, R515,R516,
C511, & C513 CLOSE DP83848
DIFFERENTIAL LINES: TD+ & TD- (100 OHMS)
DIFFERENTIAL LINES: RD+ & RD- (162 OHMS)
T501
H1102FNL
TD+
CT_TD
TD-
NC1
NC2
RD+
CT_RD
RD-
TX+
CT_TX
TX-
NC4
NC5
RX+
CT_RX
RX-
J501
RJHSE-5380
SHIELD1
SHIELD2
R515 49.9R 1/10W 1% 0603
R516 49.9R 1/10W 1% 0603
C511 0.1uF 50V 10% 0603
C514 0.1uF 50V 10% 0603
R517 82R 1/10W 1% 0603
R518 82R 1/10W 1% 0603
C512 0.1uF 50V 10% 0603
C513 10uF 16V 10% 0603
C515 0.1uF 50V 10% 0603
R520 75R 1.5W 2% 0603W
R521 75R 1.5W 2% 0603W
C519 1.5nF 1kV 10% 1206
R522 75R 1.5W 2% 0603W
R523 75R 1.5W 2% 0603W
C520 1.5nF 1kV 10% 1206
C521 1.5nF 1kV 10% 1206
PLACE C514, C515, R520,
R521 & C519 CLOSE TO T501
PLACE C520, R522, R523,
& C521 CLOSE TO J501
LAYOUT NOTE:
AGND REFERENCE GND FOR U501
& TD/RD LINES